CHINA TOP MACHINETOOLS

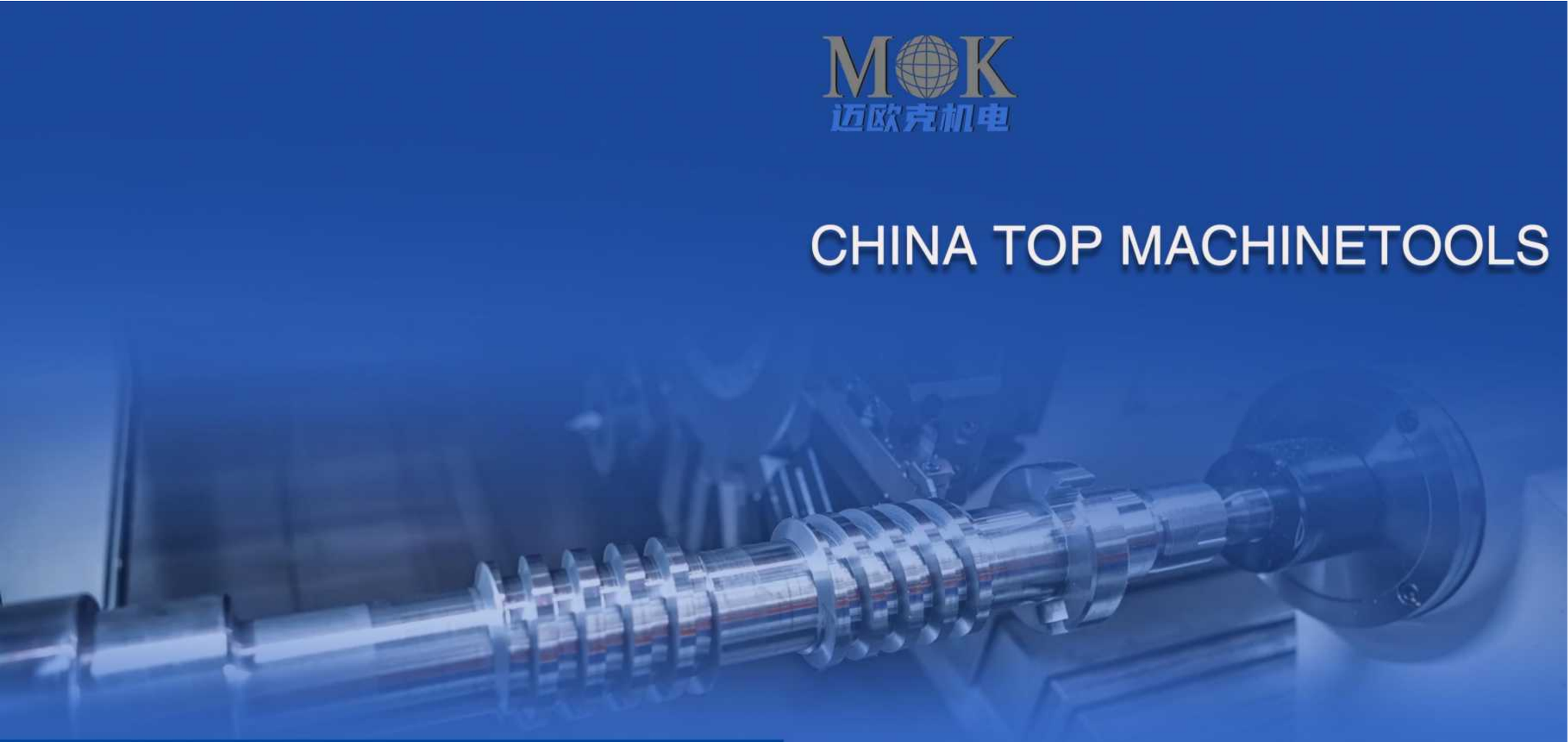

WENZHOU MAIOUKE ELECTROMECHANICAL EQUIPMENT CO.,LTD.

No.455, Binhai 12th Road, Wenzhou Economic and Technological Development Zone, Wenzhou City 325024, Zhejiang Province, China

+86 577 8813 1332

+86 139 6883 7667

sales@mokmachinery.com

www.mokmachinery.com

Website

Whatsapp

Wechat

温州迈欧克机电设备有限公司

WENZHOU MAIOUKE ELECTROMECHANICAL EQUIPMENT CO.,LTD.

MOK 迈欧克机电 *China Top Machinetools*

Catalog

Company Introduction

MOK – based on 20s years experience in supplying of metalworking equipment.We are now currently the local official distributor for China leading machine tool manufacturers such as SHENYANG (SYMG&SMTCL) , YUNNANN CY, TIANSHUI SPARK,NEWAY and YISHUI. Our product covers most kinds of metalworking machinery which include conventional horizontal lathes / CNC flat and slant bed lathe / Mill-turning centers / CNC VTL / boring machines/precision machining centers,etc.We provide customers most favorable price thanks to our warehouse stocks of 2500 sq. m., which allows to reduce and optimize the delivery time of equipment.

The motto of our team is "We don't sell products, we provide solutions."

We are always happy to cooperate with you!

Agency Brand

SMTCL

SYMG 沈阳机床集团

SPARK 星火机床

CY

NEWAY 纽威数控装备

沂机

P1–6 CONVENTIONAL LATHE

P7–18 HORIZONTAL LATHE

P19–28 FLAT BED LATHE

P29–50 SLANT BED LATHE

P51–62 MILL TURNING CENTER

P63–70 VERTICAL LATHE

P71–84 PIPE THREADING LATHE

P85–88 VERTICAL MACHINING CENTER

P89–90 HORIZONTAL MACHINING CENTER

P91–98 5-AXIS MACHINING CENTER

P99–104 BORING MACHINE

HIGH SPEED GAP BED LATHE

CY-L1660G / CY-L1640G
CY-L1630G

Stander configuration

- 3-jaw chuck
- Fixed center
- Center sleeve

CONVENTIONAL LATHE

Items	Unit	CY-L1630G	CY-L1640G	CY-L1660G
Swing over bed	mm		410	
Swing over cross slide	mm		258	
Distance between centers	mm	750	1000	1500
Swing in gap	mm		580	
Width of gap	mm		250	
Width of bed	mm		274	
Spindle bore diameter	mm		52	
Spindle speed	rpm		33-2000 rpm (16 steps)	
Range of longitudinal feed	mm/rev		0.087-1.22	
Range of cross feed	mm/rev		0.066-0.931	
Cross slide travel	mm		220	
Top slide travel	mm		100	
Max travel of tailstock quill	mm		100	
Tailstock quill diameter	mm		52	
Main motor	kw		3/4.5	
Machine size (LxWxH)	mm	1820x1040x1700	2070x1040x1700	2570x1040x1700
GW/NW(KGS)	kg	1800/1300	2000/1400	2500/1700
Package dimensions	mm	2020x1120x1820	2280x1120x1820	2750x1120x1820

Optional configuration

- 4-jaw chuck
- Steady rest
- Follow rest
- Foot brake
- Chuck cover

HIGH SPEED GAP BED LATHE

CY-S1840G / CY-S1860G
CY-S2040B / CY-S2060B

Stander configuration

- 3-jaw chuck
- Fixed center
- Center sleeve

CONVENTIONAL LATHE

Items	Unit	CY-S1840G	CY-S1860G	CY-S2040B	CY-S2060B
Swing over bed	mm	460		510	
Swing over cross slide	mm	275		320	
Distance between centers	mm	1000	1500	1000	1500
Swing in gap	mm	690		734	
Width of gap	mm	275		320	
Width of bed	mm	300			
Spindle bore diameter	mm	57		82	
Morse taper of spindle center	-	M6		1:20	
Spindle speed	rpm	20-2000(12 steps)		15-1500(12steps)	
Inch system threads	t.p.i.	2-56			
Metric threads	mm	0.5-14			
Range of longitudinal feed	mm/rev	0.06-0.82			
Range of cross feed	mm/rev	0.017-0.242			
Lead screw diameter	mm	35			
Lead screw pitch	-	6 mm (Metric system) 4 t.p.i.(Inch system)			
Max travel of tailstock quill	mm	127			
Tailstock quill diameter	mm	58			
Main motor	kw	5.5		7.5	
Machine size	mm	2020×1020×1700	2580×1020×1700	2020×1020×1700	2580×1020×1700
GW/NW(KGS)	kg	2000/1400	2500/1800	2000/1400	2500/1800
Package dimensions	mm	2320×1120×1820	2880×1120×1820	2320×1120×1820	2880×1120×1820

Optional configuration

- 4-jaw chuck
- Steady rest
- Follow rest
- Foot brake
- Chuck cover

GAP BED MANUAL LATHE

CY6250B / CY6266B
CY6276L

Stander configuration

- 3-jaw chuck
- Fixed center
- Center sleeve

CONVENTIONAL LATHE

Item	unit	CY6250			CY6266		CY6276L
		A	B	L	B	L	
Swing over bed	mm	500			660		760
Swing over cross slide	mm	300			430		530
Dis. Between centers	mm	1000/1500/2000/3000mm					
Stander 3-jaw chuck	-	K11250C/C6	K11250C/D8		K11325C/D8		K11325C/D8
Spindle diameter	mm	52	82	105	82	105	105
Spindle speed	rpm	9-1600 24steps	9-1600 (24step)	6-1120 (24steps)	9-1600 (24steps)	6-1120 (24steps)	6-1120 (24steps)
Spindle max output torque(30mins)	N.M	1400		2000			
Range of longitudinal feed	mm/rev	0.028-6.43	0.028-6.43	0.063-6.43	0.028-6.43	0.063-6.43	0.063-6.43
Range of cross feed	mm/rev	0.012-2.73	0.012-2.73	0.012-2.73	0.012-2.73	0.027-2.73	0.027-2.73
Main motor	kw	7.5	7.5	11	11		
Cross slide travel	mm	340			370		
Top silde travel	mm	145			200		
Longitudinal rapid traveling speed	m/min	4.5			4.5		
Transversal rapid traveling speed	m/min	1.9			1.9		
Tailstock quill diameter	mm	75			75		
Max travel of tailstock quill	mm	150			150		
Cutter size	mm	25×25			25×25		
Machine size	mm	2500/3000/3500/4500×1150×1300			2500/3000/3500/4500×1250×1400(76L:+100 on height)		
Net/gross weight	kg	2540/2100 2860/2400 3200/2800 4000/3800			2800/2200 3000/2500 3400/2900 4200/3400(76L:+100 on both)		
Wroking roundness	-	0.01					
Working cylindricity	-	0.04/300					
Working flatness	-	0.025/Φ300					
Accuracy stander		GB/T4020-1997					

Optional configuration

- 4-jaw chuck
- Steady rest
- Follow rest
- Foot brake
- Chuck cover

HEAVY DUTY HORIZONTAL LATHE

CWA6185/CWA61100

SPARK 星火机床

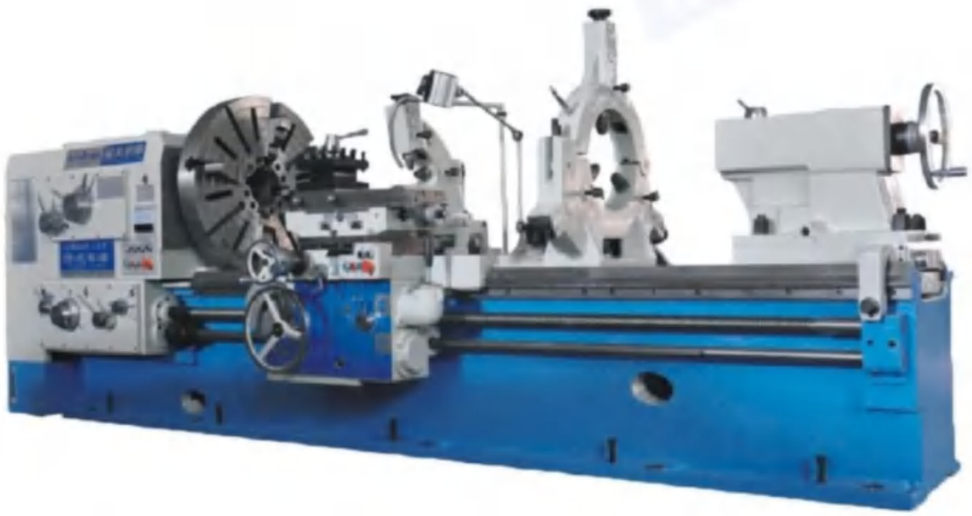

HORIZONTAL LATHE

Item		CWA6185	CWA61100
		CWA6285	CWA62100
Swing over bed	mm	850	1000
Swing over gap	mm	1150	1350
Swing over carriage	mm	510	710
Maximun turning length	mm	1500-16000	
Maximum weight of workpiece between centers	kg	4000	
Width of the bed	mm	600	
Spindle noses No.	ISO	A2-11	
Diameter of spindle front bearing	mm	160	
Diameter of spindle hole	-	100	
Number of spindle speeds	-	Manual 4-speed stepless	
Range of spindle speeds	R/min	5-630	
Main motor power	kw	AC15	AC18.5
Section of tool shank	mm	32x32	
Swing angle of tool post	-	±90°	
Travel of tool post	mm	250	
Travel of cross slide	mm	600	
Rapid travelling speed of tool post	mm/min	900	
Rapid travelling speed of transverse	mm/min	1800	
Rapid travelling speed of longitudinal	mm/min	3640	
Diameter of Tailstock quill	mm	120	
Taper hole of tailstock quill	-	Morse No.6	
Travel of tailstock quill	mm	250	
Weight of the lathe with 3m b.c.	kg	6800	7200
Additional weight par 1 m b.c.	kg	600	
Machine overall dimension (Length x width x height) (3m)	mm	5150x 1500x 1500	5150x 1600x 1600

Stander configuration

- 4-jaw chuckϕ800mm
- Center
- Lighting unit
- Special tools
- Cooling unit

Optional configuration

- 3.4-jaw chuck ϕ320mm, ϕ800mm,ϕ1000mm
- Steady rests ϕ40~ϕ350mm, ϕ50~ϕ470mm,ϕ100~ϕ520mm
- Roller supporting device ϕ180~ϕ520mm
- Follower rest ϕ30~ϕ120mm
- Taper turning device
- Boring device

HEAVY DUTY HORIZONTAL LATHE

CW61100E/CW61125E

SPARK 星火机床

HORIZONTAL LATHE

Item		CW61100E CW62100E	CW61125E CW62125E
Max.swing over bed	mm	1000	1250
Max.swing over gap	mm	1250	1500
Max.Swing over carriage	mm	650	900
Maximum turning length	mm	1500~16000	
Maximum weight of workpiece between centers	kg	6000、8000、10000	
Width of the bed	mm	755	
Spindle noses No.	ISO	A2-15	
Diameter of spindle front bearing	mm	200、220	
Spindle hole	mm	130、100	
Number of spindle speeds	-	Manual operating 21 steps	
Range of spindle speeds	r/min	3.15~315	
Main motor power	kW	AC22	
Section of tool shank	mm	45×45	
Swing angle of tool post	-	±90°	
Travel of transverse tool post	mm	-	-
Travel of longitudinal tool post	mm	300	
Travel of cross slide	mm	520	680
Diameter of Tailstock quill	mm	160,200	
Taper hole of tailstock quill	-	Metric No.80,Morse No.6	
Travel of tailstock quill	mm	300	
Weight of the lathe with 3m	kg	12000	12500
Additional weight per 1m	kg	800	
Machine overall dimension (length x width x height)(3m)	- mm	6100x1900x2000	6100x2000x2100

Stander configuration

- 4-jaw chuck
- Center
- Lighting unit
- Special tools
- Cooling unit

Optional configuration

- Centre stands
- Open centre stand
- Boring Holders
- Grinding tool holders

HEAVY DUTY HORIZONTAL LATHE

CW61140/CW61160

SPARK 星火机床

Stander configuration

- 4-jaw chuck
- Center
- Lighting unit
- Special tools
- Cooling unit

Item		CW61140	CW61160
		CW62140	CW62160
Max.swing over bed	mm	1400	1600
Max.swing over gap	mm	1930	2110
Max.Swing over carriage	mm	1050	1250
Maximum turning length	mm	1500~16000	
Maximum weight of workpiece between centers	kg	6,000,800,010,000	
Width of the bed	mm	970	
Spindle noses No.	ISO	A2-15	
Diameter of spindle front bearing	mm	200,220	
Spindle hole	mm	130,100	
Number of spindle speeds	-	Manual operating 21 steps	
Range of spindle speeds	r/min	2.5~250	
Main motor power	kW	AC22	
Section of tool shank	mm	45×45	
Swing angle of tool post	-	±90°	
Travel of transverse tool post	mm	200	200
Travel of longitudinal tool post	mm	400	400
Travel of cross slide	mm	880	
Travel of tailstock quill	mm	300	
Weight of the lathe with 3m	kg	14000	15000
Additional weight per 1m	kg	1000	
Machine overall dimension (length x width x height)(3m)	mm	6360x1960x2400	6360×2060×2500

Optional configuration

- Centre stands
- Open centre stand
- Boring Holders
- Grinding tool holders

CNC HEAVY DUTY HORIZONTAL LATHE

CCK61630

SPARK 星火机床

HORIZONTAL LATHE

Main specifications	Unit	CCK61630
Swing over bed	mm	6300
Swing over carriage	mm	5000
Max.turning length	mm	5～20
Max.load between centers	ton	200
Bed width	mm	Split bed
Spindle speed	rpmn	0.2~40
Spindle motor	KW	DC185
Close steady rest	mm	ϕ500~ϕ1200(CCK61315)
Open steady rest	mm	ϕ1200~ϕ2250(CCK61315)
Machine outline size of 5 meters	mm	12750×4740×3550 (CCK61315)
Shape of tool post	-	Frame tool holders

Stander configuration

- FANUC Oi-TF system

Optional configuration

- SIEMENS 828D,Beijing KND and other CNC systems
- Chip Conveyor
- CNC horizontal eight-station tool holders
- Centre stands
- Open centre stands
- Boring tool holders
- Protective devices
- Oil coolers
- Hydraulic centre stands
- Tool followers
- CNC vertical four-station tool holders
- Grinding tool holders

CNC LIGHTWEIGHT HORIZONTAL

CKA6185 / CK61125F

SPARK 星火机床

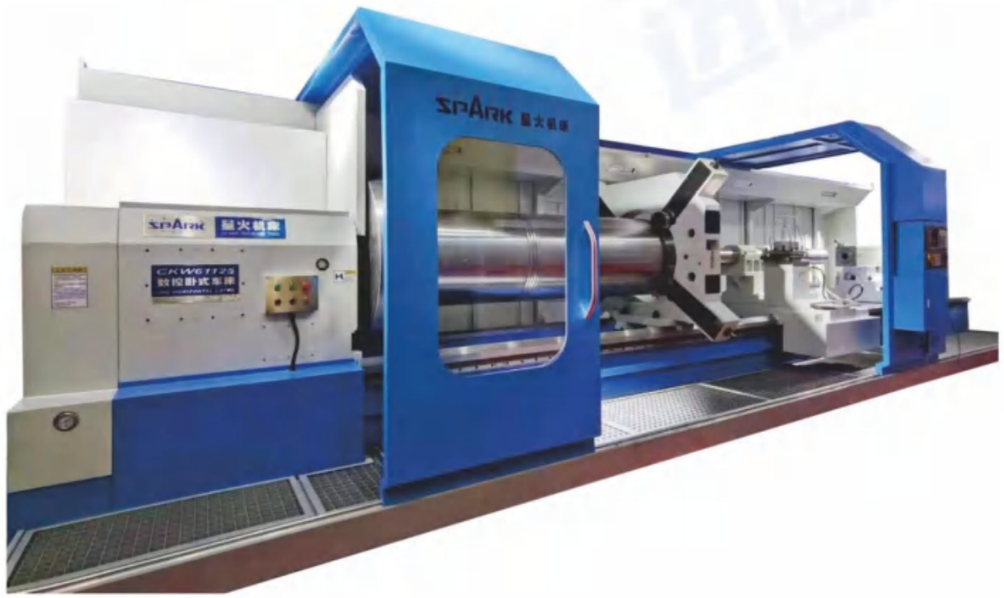

HORIZONTAL LATHE

Main specifications	Unit	CKA6185	CK61125F
Spindle center height	mm	405	635
Swing over bed	mm	850	1250
Swing over carriage	mm	510	900
Max. workpiece length	mm	1000	1500
Max.turning length	mm	L-250	L-250
Max. load between centers	kg	4000	8000
Bed width	mm	600	970
Front bearing diameter of spindle	mm	160	200220
Diameter of spindle bore	mm	100	130、100
Steps of spindle speed	-	Automatic 4-speed stepless	Automatic 4-speed stepless
Spindle speed	rpm	5-800	4-630
Spindle motor	kW	AC15/AC22	AC22/30~40
Torque of longitudinal servo motor	Nm	22/38	41
Torque of cross servo motor	Nm	12/30	41
Section of tool shank	mmxmm	32×32	45×45
Positions of tool post	-	Vertical 4/Horizontal 8, 12	Vertical 4/Horizontal 8, 12
Travel of cross slide	mm	550	650
Feed speed of longitudinal	mm/min	1～2000	1～2000
Feed speed of cross	mm/min	1～2000	1～2000
Rapid travel of longitudinal and cross	mm/min	X:6000/Z:4000	X:6000/Z:4000
Diameter of tailstock quill	mm	120	200
Travel of tailstock sleeve	mm	250	300
Travel of tailstock quill	-	Morse 6	Morse 6
Weight of the lathe with 3m	kg	6800	13000
Increase weight per meter	kg	800	1200

Optional configuration

- Centre stands
- Hydraulic centre stands
- Open centre stands
- Tool followers
- Chip Conveyor
- Boring tool holders
- CNC vertical four-station tool holders
- CNC horizontal eight-station tool holders
- Protective devices
- Oil coolers
- Grinding tool holders

CNC FLAT BED LATHE

CAK3665

SMTCL

FLAT BED LATHE

Item	Unit	CAK3665
Max parts length	mm	750
Max cutting length	mm	650
Max swing diameter over bed	mm	Φ400
Max cutting diameter over slide	mm	Φ180
Max cutting diameter	mm	Φ360
Spindle nose type	-	A_2-6
Chuck diameter	mm	Φ200
Spindle bore	mm	Φ53
Manual stepless spindle speed range	r/min	-
Main motor power	kw	7.5(Main servo motor)
Tailstock quill diameter	mm	Φ60
Tailstock quill travel	mm	140
Turret type	-	Vertical 4-postion
Tool shank size	mm	□20×20
X/Z axis fast travel	m/min	6/12
Machine weight	kg	1860
Overall dimension	mm	2350×1500×1580
Max parts length	mm	550

Stander configuration

- FANUC Oi-TF plus system
- 3 jaw manul chuck Φ200
- Chip box
- Full cover
- Vertical 4 position turret
- Manal tailstock
- Single Spindle

Optional configuration

- GSK 980TDi system, Siemens 828D system
- Horizontal 6 position turret
- Hydraulic tailstock
- Chip conveyor
- Safety lock
- 3 jaw manul chuck Φ250
- Hydraulic chuck

CNC FLAT BED LATHE

CAK4085

SMTCL

FLAT BED LATHE

Item	Unit	CAK4085	
Max parts length	mm	1000	1000
Max cutting length	mm	850	850
Max swing diameter over bed	mm	Φ400	Φ400
Max cutting diameter over slide	mm	Φ200	Φ200
Max cutting diameter	mm	Φ400	Φ400
Spindle nose type	-	$A_{1-}6$	$A_{1-}6$
Chuck diameter	mm	Φ250	Φ250
Spindle bore	mm	Φ53	Φ53
Manual stepless spindle speed range	r/min	-	100-2000
Main motor power	kw	7.5(Main servo motor)	7.5(Main servo motor)
Tailstock quill diameter	mm	Φ60	Φ60
Tailstock quill travel	mm	140	140
Turret type	-	Vertical 4-postion	Vertical 4-postion
Tool shank size	mm	□20×20	□20×20
X/Z axis fast travel	m/min	6/12	6/12
Machine weight	kg	1960	1960
Overall dimension	mm	2470×1500×1580	2470×1500×1580

Stander configuration

- FANUC Oi-TF plus system
- 3 jaw manul chuck Φ250
- Single Spindle,Manul Spindle
- Full cover
- Vertical 4 position turret
- Manal tailstock
- Chip box

Optional configuration

- GSK 980TDi system, Siemens 828D system
- Hydraulic chuck
- Hydraulic tailstock
- Horizontal 6 position turret
- Safety lock
- 3 jaw manul chuck Φ200
- Chip conveyor

CNC FLAT BED LATHE

CAK5085

SMTCL

FLAT BED LATHE

Item	Unit	CAK5085
Max parts length	mm	890
Max cutting length	mm	850
Max swing diameter over bed	mm	Φ500
Max cutting diameter over slide	mm	Φ300
Max cutting diameter	mm	Φ500
Spindle nose type	-	A_2-8
Chuck diameter	mm	Φ250
Spindle bore	mm	Φ78
Manual stepless spindle speed range	r/min	22-1800
Main motor power	kw	7.5(Main servo motor)
Tailstock quill diameter	mm	Φ75
Tailstock quill travel	mm	150
Turret type	-	Vertical 4-postion
Tool shank size	mm	□20×20
X/Z axis fast travel	m/min	6/12
Machine weight	kg	2800
Overall dimension	mm	2770×1700×1735

Stander configuration

- FANUC Oi-TF plus system
- 3 jaw manul chuck Φ250
- Chip box
- Full cover
- Vertical 4 position turret
- Manal tailstock
- Auto Spindle

Optional configuration

- GSK 980TDi system, Siemens 828D system
- Hydraulic chuck
- Safety lock
- Hydraulic tailstock
- Horizontal 6 position turret
- Chip conveyor
- 3 jaw manul chuck Φ315
- Sigle spindle, Stepless Maunal spindle

CNC FLAT BED LATHE

CAK63135

SMTCL

FLAT BED LATHE

Item	Unit	CAK63
Machine specification	-	135
Max parts length	mm	1500
Max cutting length	mm	1350
Max swing diameter over bed	mm	Φ630
Max cutting diameter over slide	mm	Φ350
Max cutting diameter	mm	Φ630
Spindle nose type	-	A2-11
Chuck diameter	mm	Φ315
Spindle bore	mm	Φ104
Infinitely variable within 4 hydraulic speeds Spindle speed range	r/min	17-1000
Main motor power	kw	11(Main servo motor)
Tailstock quill diameter	mm	Φ125
Tailstock quill travel	mm	250
Turret type	-	Vertical 4-postion
Tool shank size	mm	□32×32
Machine weight	kg	5550
Overall dimension	mm	3860×2010×1780

Stander configuration

- FANUC Oi-TF plus system
- Full cover
- Manal tailstock, Big tailstock
- 3 jaw manul chuck Φ315
- Vertical 4 position turret
- Auto Spindle
- Chip box

Optional configuration

- GSK 988TA system, Siemens 828D system
- Hydraulic tailstock
- Horizontal 6 position turret
- 3 jaw manul chuck Φ315~Φ400
- Hydraulic chuck
- Chip conveyor
- Safety lock

CNC FLAT BED LATHE

CAK80135

SMTCL

FLAT BED LATHE

Item	Unit	CAK80
Machine specification	-	135/1355
Max parts length	mm	1500
Max cutting length	mm	1350
Max swing diameter over bed	mm	Φ800
Max cutting diameter over slide	mm	Φ520
Max cutting diameter	mm	Φ800
Spindle nose type	-	A2-11
Chuck diameter	mm	Φ315/Φ400
Spindle bore	mm	Φ104/Φ130
Infinitely variable within 4 hydraulic speeds	r/min	17-1000/800
Main motor power	kw	15(Main servo motor)
Tailstock quill diameter	mm	Φ125/Φ160
Tailstock quill travel	mm	250
Turret type	-	Vertical 4-postion
Tool shank size	mm	□32×32 □40×40
Machine weight	kg	5750/6000
Overall dimension	mm	3860×2010×1780

Stander configuration

- FANUC Oi-TF plus system
- 3 jaw manul chuck Φ315
- Auto Spindle
- Full cover
- Vertical 4 position turret
- Chip box
- Manal tailstock, Big tailstock

Optional configuration

- GSK 988TA system, Siemens 828D system
- Hydraulic chuck
- Hydraulic tailstock
- Horizontal 6 position turret
- Chip conveyor
- 3 jaw manul chuck Φ400~Φ800
- Safety lock

CNC FLAT BED LATHE

HTC125300

SYMG 沈阳机床集团

Stander configuration

- FANUC Oi system
- Imported lead screw
- Manual tailstock
- Center frame Φ50~Φ300
- External cooling (including chip conveyor)
- 22kW variable frequency main motor
- 1000mm manual four-jaw chuck
- Semi-enclosed protection
- NSK spindle bearings
- Four-station electric tool turret

Item		Unit	HTC125300
Max. swing diameter over bed		mm	1250
Max. clamping workpiece length (effective center distance)		mm	3100
Max. cutting length		mm	3000
Max. cutting diameter		mm	1250
Max. swing diameter over cross slide		mm	850
Spindle nose type and code		-	A2-15
Spindle front hole taper		-	Metric 140
Spindle bore diameter		mm	130
Hydraulic variable Headstock	spindle speed range/Max. output	r/min/Nm	5～500/7500
	Spindle speed steps	-	Hydraulic three gears, stepless speed change within each gear
	Main motor output power	kW	22
Chuck	Chuck diameter/type	mm	ϕ1000/Manual four claw
X-axis rapid traverse speed		m/min	6
Z-axis rapid traverse speed		m/min	5
X-axis travel		mm	650
Z-axis travel		mm	3000
Mechanical tailstock	Tailstock sleeve diameter	mm	160
	Tailstock sleeve travel	mm	300
Tailstock sleeve taper		morse	6#
Tool post indexing time		s	6
Tool size	Cylindrical turning tool	mm	40×40
Max. load capacity	Disc workpieces	kg	1000
	Shaft workpieces	kg	5000
Machine weight	Total weight(net weight)	kg	13000
Center height	from bed	mm	625
	from the ground	mm	1275
Overall dimension (L x W x H)		mm	6500×2725×2450
Machining accuracy		-	IT6~IT7
Roundness of machined workpiece		mm	0.005
Consistency of machined diameter		mm	0.025 / 300
Flatness of machined workpiece		mm	0.02/Φ300
Surface roughness of machined workpiece		μm	Outer circle Ra1.6μm
			Arc surface, conical surface Ra3.2μm
Positioning Accuracy	X-axis	mm	0.014
	Z-axis	mm	0.032
Repeatability	X-axis	mm	0.006
	Z-axis	mm	0.016

Optional configuration

- Siemens 828D system
- Replacement of manual four-jaw Φ1250 chuck
- Yantai AK23380 enlarged tool turret

CNC SLANT BED LATHE

HTC40E

SYMG 沈阳机床集团

SLANT BED LATHE

Items	Unit	HTC40E	
Length specification	mm	300	500
Maximum swing diameter over bed	mm	Φ500	Φ500
Maximum cutting length	mm	300	500
Maximum cutting diameter	mm	Φ360	Φ360
Maximum swing diameter over cross slide	mm	Φ320	Φ320
Spindle nose type and code	-	A2-6	A2-6
Spindle bore diameter	mm	Φ65	Φ65
Maximum bar stock passing diameter	mm	Φ50	Φ50
Single-spindle spindle box			
Spindle speed range	r/min	50-4500	50-4500
Maximum output torque of spindle	Nm	177	177
Main motor output power	-	-	-
Main motor power			
30 minutes/continuous	kw	15/11	15/11
Chuck			
Chuck diameter	inch	8"	8"
X-axis rapid traverse speed (rolling rail)	m/min	30	30
Z-axis rapid traverse speed (rolling rail)	m/min	30	30
X-axis travel	mm	200	200
Z-axis travel	mm	320	550
Standard tool post type	-	Horizontal 8-position	Horizontal 8-position
Tailstock travel (sliding guide)	mm	-	350
Head travel	mm	-	100
Tailstock sleeve taper	morse	-	5#
Maximum load capacity			
Disc workpieces	kg	200	200
Shaft workpieces	kg	-	500
Machine weight	kg	3400	3650
Overall dimension (L×W×H)	mm	2400×1900×1850	2400×1900×1850

Stander configuration

- FANUC system
- Domestic Guide rail
- Domestic Tailstock
- Domestic Screw bearing
- IEEPO servo 12-position
- Domestic Ball screw
- Chuck 8"(Solid/Hollow)

Optional configuration

- Siemens system
- 100~200mm hydraulic centre stand and accessories
- Chip remover
- 1000mm Imported Guide rail
- Taiwan Taishin 12-station hydraulic tool holder

CNC SLANT BED LATHE

HTC40B

SYMG 沈阳机床集团

Stander configuration

- FANUC system
- Imported Spindle bearing
- Imported Screw bearing
- Imported Ball screw
- Imported Guide rail
- IEEPO servo 12-position
- Chuck 8" (Solid/Hollow)
- Domestic Tailstock

SLANT BED LATHE

Items	Units	HTC40B/500	HTC40B/1000
Length specification	mm	500	1000
Maximum swing diameter over bed	mm	Φ600	Φ560
Maximum cutting length	mm	500	1000
Maximum cutting diameter	mm	Φ400	Φ360
Maximum swing diameter over cross slide	mm	Φ320	Φ350
Spindle nose type and code	-	A2-8	A2-8
Spindle bore diameter	mm	Φ80	Φ80
Maximum bar stock passing diameter	mm	Φ50	-
Headstock			
Spindle speed range	r/min	50-3500	50-4000
Maximum output torque of spindle	Nm	245	177
Spindle speed steps	-	Infinitely variable speeds	Infinitely variable speeds
Main motor power	kw	15(30minutes)/11(rated)	15(30minutes)/11(rated)
Chuck			
Chuck diameter/type	inch	8"	8"
X-axis rapid traverse speed	m/min	30	30
Z-axis rapid traverse speed	m/min	30	30
X-axis travel	mm	200	200
Z-axis travel	mm	550	1050
Tailstock sleeve travel	mm	100	100
Tailstock sleeve taper	morse	5#	4#
Standard tool post type	-	Horizontal 8-position	Horizontal 8-position
Tool size			
Cylindrical turning tool	mm	25×25	25×25
Boring tool bar diameter	mm	Φ40/Φ32/Φ25/Φ20	Φ40/Φ32/Φ25/Φ20
Whether cutter head is able to select cutter handily	-	Yes	Yes
Maximum load capacity			
Disc workpieces	kg	200	200
Shaft workpieces	kg	500	500
Machine weight	kg	4200	4650
Overall dimension (L×W×H)	mm	2700×1900×2100	3570×1860×1850

Optional configuration

- GSK system, Siemens system
- FANUC Main moto
- Chip remover

CNC SLANT BED LATHE

HTC40P

SYMG 沈阳机床集团

SLANT BED LATHE

Items	Units	HTC 40P/1000	HTC 40P/1500
Length specification	mm	1000	1500
Maximum swing diameter over bed	mm	Φ600	Φ600
Maximum cutting length	mm	1000	1500
Maximum cutting diameter	mm	Φ500	Φ500
Maximum swing diameter over cross slide	mm	Φ400	Φ400
Spindle nose type and code	-	A2-8	A2-8
Spindle bore diameter	mm	Φ80	Φ80
Maximum bar stock passing diameter	mm	Φ66	Φ66
Headstock			
Spindle speed range	r/min	50-3500	50-3500
Maximum output torque of spindle	Nm	302	302
Spindle speed steps	-	Infinitely variable speeds	Infinitely variable speeds
Main motor power	kw	18.5(30minutes)/15(rated)	18.5(30minutes)/15(rated)
Chuck			
Chuck diameter/type	inch	8"	8"
X-axis rapid traverse speed	m/min	15	15
Z-axis rapid traverse speed	m/min	15	15
X-axis travel	mm	270	270
Z-axis travel	mm	1010	1510
Tailstock sleeve travel	mm	100	100
Tailstock sleeve taper	morse	4#	4#
Standard tool post type	-	Horizontal 12-position	Horizontal 12-position
Tool size			
Cylindrical turning tool	mm	25 × 25	25 × 25
Boring tool bar diameter	mm	Φ40/Φ32/Φ25/Φ20	Φ40/Φ32/Φ25/Φ20
Whether cutter head is able to select cutter handily	-	Yes	Yes
Maximum load capacity			
Disc workpieces	kg	200	200
Shaft workpieces	kg	500	500
Machine weight	kg	5500	6000
Overall dimension (L×W×H)	mm	4100×2050×1960	4600×2050×1960

Stander configuration

- FANUC system
- Imported Spindle bearing
- Imported Screw bearing
- Imported Ball screw
- Imported Guide rail
- IEEPO servo 12-position
- Chuck 8"(Solid/Hollow)
- Domestic Tailstock

Optional configuration

- GSK system, Siemens system
- FANUC Main moto
- Chip remover

CNC SLANT BED LATHE

HTC50E

SYMG 沈阳机床集团

SLANT BED LATHE

Items	Units	HTC 50E
Maximum swing diameter over bed	mm	700、670、670
Maximum cutting length	mm	1000、1500、2000
Maximum cutting diameter	mm	ShaftΦ500/DiscΦ550
Maximum swing diameter over cross slide	mm	Φ500
Spindle nose type and code	-	A2-8
Headstock		
Spindle bore diameter	mm	Φ80
Spindle speed range	r/min/Nm	50~3500/344 GSK
Main motor power 30 minutes/continuous	kw	30/22
Chuck diameter/type	inch	10"
X-axis rapid traverse speed	m/min	24
Z-axis rapid traverse speed	m/min	24
X-axis travel	mm	320
Z-axis travel	mm	1050、1550、2050
Tailstock sleeve diameter	-	Φ120
Tailstock sleeve travel	mm	150
Tailstock travel	mm	800、1300、1800
Tailstock sleeve taper	morse	5#
Locking and fixing form of tailstock sleeve and tailstock body	-	Hydraulic sleeve tailstock, tailstock body is locked and fixed manually
Standard tool post type	-	Horizontal 12-position
Tool size		
Cylindrical turning tool	mm	25 x 25
Boring tool bar diameter	mm	Φ40/Φ32/Φ25/Φ16
Whether cutter head is able to select cutter	-	Yes
Maximum load capacity		
Disc workpieces	kg	200
Shaft workpieces	kg	800
Machine weight	kg	7000、8500、10000
Overall dimension (L x W x H)	mm	3700 x 2210 x 2200
		4300 x 2210 x 2200
		4900 x 2210 x 2200

Stander configuration

- FANUC system
- Imported two-axis screw
- 125 Centre high tool holders
- Chip remover
- FANUC Main motor
- Imported two-axis roller guide
- Chuck 12" Solid
- FANUC Servo motor
- Imported Spindle bearing
- Hydraulic tailstock

Optional configuration

- GSK Main motor
- Chuck 10"(Solid/Hollow), Chuck 12"Hollow
- Manual tailstock, Servo tailstock

CNC SLANT BED LATHE

HTC50B

SYMG 沈阳机床集团

SLANT BED LATHE

Items	Units	HTC 50B
Maximum swing diameter over bed	mm	700、670、670
Maximum cutting length	mm	1000、1500、2000
Maximum cutting diameter	mm	ShaftΦ500/ DiscΦ550
Maximum swing diameter over cross slide	mm	Φ500
Spindle nose type and code	-	A2-11
Headstock		
Spindle bore diameter	mm	Φ104
Spindle speed range	r/min/Nm	35~3000/890 FANUC
Main motor power 30 minutes/continuous	kw	30/22
Chuck diameter/type	inch	12"
X-axis rapid traverse speed	m/min	30
Z-axis rapid traverse speed	m/min	30
X-axis travel	mm	320
Z-axis travel	mm	1050、1550、2050
Tailstock sleeve diameter	-	Φ120
Tailstock sleeve travel	mm	150
Tailstock travel	mm	800、1300、1800
Tailstock sleeve taper	morse	5#
Locking and fixing form of tailstock sleeve and tailstock body	-	Hydraulic sleeve tailstock, Tailstock hydraulic locking and fixing
Standard tool post type	-	Horizontal 12-position
Tool size		
Cylindrical turning tool	mm	25×25
Boring tool bar diameter	mm	Φ50/Φ40/Φ32/Φ25
Whether cutter head is able to select cutter	-	Yes
Maximum load capacity		
Disc workpieces	kg	200
Shaft workpieces	kg	800
Machine weight	kg	7000、8500、10000
Overall dimension (L×W×H)	mm	3700×2210×2200
		4300×2210×2200
		4900×2210×2200

Stander configuration

- FANUC system
- Imported two-axis screw
- 125 Centre high tool holders
- Chip remover
- FANUC Main motor
- Imported two-axis roller guide
- Chuck 12" Solid
- FANUC Servo motor
- Imported Spindle bearing
- Hydraulic tailstock

Optional configuration

- GSK Main motor
- Chuck 10"(Solid/Hollow), Chuck 12"Hollow
- Manual tailstock, Servo tailstock

CNC SLANT BED LATHE

HTC63400n

SYMG 沈阳机床集团

Stander configuration

- FANUC Oi-TF system (main servo)
- IEEPO horizontal 12-servo power turret
- Domestic chip conveyor
- Combination of sliding and rolling guide rails
- Korean (or Taiwanese) 15" hydraulic chuck
- Imported bearings
- Domestic lead screw
- Hydraulic tailstock
- A2-11 spindle

Item		Unit	HTC63400n
Max. swing diameter over bed		mm	800
Max. cutting length		mm	4000
Max. cutting diameter		mm	Shaft 630/Disc 750
Max. swing diameter over cross slide		mm	630
Spindle nose type and code		-	A2-11
Spindle bore diameter		mm	110
Max. bar stock passing diameter		mm	85
Headstock	spindle speed range/Max. output torque	r/min/Nm	20～2000/950
Main motor output power	30 minutes/continuous	kW	30/32
Standard chuck	Chuck diameter	inch	15²
X-axis rapid traverse speed		m/min	12
Z-axis rapid traverse speed		m/min	12
X-axis travel		mm	410
Z-axis travel		mm	4050
Tailstock sleeve diameter		mm	180
Tailstock sleeve travel		mm	160
Tailstock spindle taper		morse	6#
Standard tool post type		-	Horizontal 12-station
Tool size	Cylindrical turning tool	mm	32×32
	Boring tool bar diameter	mm	Φ50/Φ40/Φ32/Φ25
Can the cutter head be selected nearby		-	YES
Machine Weight	Total weight	kg	23000
Max. load capacity	Disc workpieces	kg	500(Including chuck and other accessories)
	Shaft workpieces	kg	2000((Including chuck and other accessories)
Overall dimension (L x W x H)		mm	6900×2825×2680

Optional configuration

- 18" or 21" chuck
- Center rest
- Tool setter
- Servo tailstock

CNC SLANT BED LATHE

HTC80150n

SYMG 沈阳机床集团

Stander configuration

- Standard configuration
- Imported bearings
- Domestic lead screw
- Hydraulic tailstock
- A2-11 variable speed spindle
- FANUC Oi-TF system (main servo)
- IEEPO horizontal 12-servo tool holder
- Combination of sliding and rolling guide rails
- South Korean (or Taiwanese) 15" middle solid chuck
- Domestic chip conveyor

Item		Unit	HTC80150n
Max. swing diameter over bed		mm	1000
Max. cutting length		mm	1500
Max. cutting diameter		mm	Shaft 800/Disc 800
Max. swing diameter over cross slide		mm	800
Spindle nose type and code		-	A2-11
Spindle bore diameter		mm	130
Max. bar stock passing diameter		mm	115
Headstock	spindle speed range/Max. output torque	r/min/Nm	20～1200/2450
Main motor output power	30 minutes/continuous	kW	37/30
Standard chuck	Chuck diameter	inch	15²
X-axis rapid traverse speed		m/min	12
Z-axis rapid traverse speed		m/min	15
X-axis travel		mm	410
Z-axis travel		mm	1550
Tailstock sleeve diameter		mm	180
Tailstock sleeve travel		mm	160
Tailstock spindle taper		morse	6#
Standard tool post type		-	Horizontal 12-station
Tool size	Cylindrical turning tool	mm	32×32
	Boring tool bar diameter	mm	Φ50/Φ40/Φ32/Φ25
Can the cutter head be selected nearby		-	YES
Machine Weight	Total weight	kg	17000
Max. load capacity	Disc workpieces	kg	500(Including chuck and other accessories)
	Shaft workpieces	kg	2000((Including chuck and other accessories)
Overall dimension (L x W x H)		mm	5400×2825×2680

Optional configuration

- 18" or 21" chuck
- Center rest
- Tool setter
- Servo tailstock

CNC SLANT BED LATHE

iT35L

SMTCL

SLANT BED LATHE

Items	Units	iT35L
Maximum turning diameter	mm	Φ360
Maximum turning length	mm	500
Maximum swing diameter over bed	mm	Φ580
Maximum swing diameter over cross slide	mm	Φ330
Spindle		
Spindle nose type and code	-	A2-6
Inner diameter of front bearing	mm	100
Spindle front hole taper and taper hole		1:20;Φ70
Spindle bore diameter	mm	Φ65
Maximum bar stock passing diameter	mm	Φ50
Chuck diameter	inch	8
Maximum spindle revolutions	r/min	4000
Rated torque of spindle	Nm	158 (666r/min)
Maximum torque of spindle	Nm	215(666r/min)
Main motor output power continuous/30 minutes	kw	11/15
Two-axis		
X/Z axis rapid traverse speed	m/min	30
X-axis travel	mm	200
Z-axis travel	mm	510
Tailstock		
Tailstock travel	mm	400
Tailstock taper	morse	MT-5
Standard tool post type	-	Horizontal 8-position
Center height of tool holder	mm	80
Repeated positioning accuracy of tool holder indexing	Sec.	±1.6
Machine weight	kg	3600
Overall dimension (L×W×H)	mm	2550×1675×1760

Stander configuration

- FANUC-0i-TF Plus(5) System
- Domestic solid chuck cylinder
- 8-station tool holder
- Domestic hydraulic station
- Chip box

Optional configuration

- GSK988TA system
- Side chip conveyor
- Rear chip conveyor
- Special chucks
- Special cylinders
- Special tool holders

CNC SLANT BED LATHE

iT50

SMTCL

SLANT BED LATHE

Items	Units	iT50
Maximum turning diameter	mm	Φ500
Maximum turning length	mm	500
Maximum swing diameter over bed	mm	Φ580
Maximum swing diameter over cross slide	mm	Φ320
Spindle		
Spindle nose type and code	-	A2-8
Inner diameter of front bearing	mm	120
Spindle front hole taper and taper hole		1:20;Φ90
Spindle bore diameter	mm	Φ80
Maximum bar stock passing diameter	mm	Φ65
Chuck diameter	inch	10
Maximum spindle revolutions	r/min	3500
Rated torque of spindle	Nm	243(588r/min)
Maximum torque of spindle	Nm	300 (588r/min)
Main motor output power continuous/30 minutes	kw	15/18.5
Two-axis		
X/Z axis rapid traverse speed	m/min	24
X-axis travel	mm	260
Z-axis travel	mm	505
Tailstock		
Tailstock travel	mm	400
Tailstock taper	morse	MT-5
Standard tool post type	-	Horizontal 8-position
Center height of tool holder	mm	100
Repeated positioning accuracy of tool holder indexing	Sec.	±1.6
Machine weight	kg	3700
Overall dimension (L×W×H)	mm	2550×1675×1820

Stander configuration

- FANUC-0i-TF Plus(5) System
- Domestic solid chuck cylinder
- 8-station tool holder
- Domestic hydraulic station
- Chip box

Optional configuration

- GSK988TA system
- Side chip conveyor
- Rear chip conveyor
- Special chucks
- Special cylinders
- Special tool holders

CNC SLANT BED LATHE

T5.2-500/1000Q

SMTCL

Stander configuration

- FANUC-0i-TF Plus(5) system
- Collet type spindle
- Hollow chuck cylinder
- 8-station homo-services tool holder

Items	Units	T5.2-500/1000Q
Maximum turning diameter	mm	Φ280
Maximum turning length	mm	450/1000
Maximum swing diameter over bed	mm	Φ560
Maximum swing diameter over cross slide	mm	Φ350
Spindle		
Spindle nose type and code	-	A2-6
Inner diameter of front bearing	mm	100
Spindle front hole taper and taper hole	-	1:20;Φ70
Spindle bore diameter	mm	Φ65
Maximum bar stock passing diameter	mm	Φ50
Chuck diameter	inch	8
Maximum spindle revolutions	r/min	4000
Rated torque of spindle	Nm	136(769r/min)
Maximum torque of spindle	Nm	245(576r/min)
Main motor output power continuous/30 minutes	kw	11/15
Two-axis		
X/Z axis rapid traverse speed	m/min	30
X-axis travel	mm	180
Z-axis travel	mm	560/1050
Tailstock		
Tailstock travel	mm	500/950
Tailstock drive mode		Servo drive
Tailstock sleeve travel	mm	-
tailstock sleeve diameter	mm	-
Tailstock taper	morse	MT-5
Standard tool post type	-	Horizontal 8-position
Center height of tool holder	mm	80
Repeated positioning accuracy of tool holder indexing	Sec.	±1.6
Choose cutting nearby	-	Yes
Other		
distance from spindle center to bed bottom	mm	1015
Machine weight	kg	4200/4750
Total power capacity	kVA	27
Overall dimension (L×W×H)	mm	2750×1890×1900 3620×1890×1900

Optional configuration

- 12-station servo turret
- Power tool holders
- Rear chip conveyor
- Pneumatic doors
- Tool setter
- Workpiece measurement
- Oil mist collectorTool breakage detection

CNC SLANT BED LATHE

T5.2-500/1000S

SMTCL

Stander configuration

- FANUC-0i-TF Plus(5) system
- Collet type spindle
- Hollow chuck cylinder
- 8-station homo-services tool holder

Items	Units	T5.2-500/1000S
Maximum turning diameter	mm	Φ380
Maximum turning length	mm	500/1000
Maximum swing diameter over bed	mm	Φ560
Maximum swing diameter over cross slide	mm	Φ400
Spindle		
Spindle nose type and code	-	A2-8
Inner diameter of front bearing	mm	120
Spindle front hole taper and taper hole	-	1:20;Φ90
Spindle bore diameter	mm	Φ80
Maximum bar stock passing diameter	mm	Φ65
Chuck diameter	inch	10
Maximum spindle revolutions	r/min	4000
Rated torque of spindle	Nm	180(769r/min)
Maximum torque of spindle	Nm	300(576r/min)
Main motor output power continuous/30 minutes	kw	15/18.5
Two-axis		
X/Z axis rapid traverse speed	m/min	20
X-axis travel	mm	200
Z-axis travel	mm	560/1025
Tailstock		
Tailstock travel	mm	350/770
Tailstock drive mode		Bed saddle dragging
Tailstock sleeve travel	mm	100
tailstock sleeve diameter	mm	Φ100
Tailstock taper	morse	MT-4
Standard tool post type	-	Horizontal 8-position
Center height of tool holder	mm	100
Repeated positioning accuracy of tool holder indexing	Sec.	±1.6
Choose cutting nearby	-	Yes
Other		
distance from spindle center to bed bottom	mm	1015
Machine weight	kg	4300/5000
Total power capacity	kVA	42
Overall dimension (L×W×H)	mm	2870×1890×1900 3750×1890×1900

Optional configuration

- 12-station servo turret
- Power tool holders
- Rear chip conveyor
- Pneumatic doors
- Tool setter
- Workpiece measurement
- Oil mist collectorTool breakage detection

MILL TURNING CENTER

HTC40Em/HTC40Bm

SYMG 沈阳机床集团

Stander configuration

- FANUC system
- GSK Main motor
- Imported Spindle bearing
- Imported Screw bearing
- Imported Ball screw
- Imported Guide rail
- IEEPO servo 12-position
- Chuck 8"(Solid/Hollow)
- Domestic Tailstock

Items	Units	HTC40Em/500	HTC40Bm/500	HTC40Bm/1000
Swing over bed	mm	500	Φ600	Φ560
Maximum cutting length	mm	400	500	1000
Maximum cutting diameter	mm	320	Φ400	Φ360
Maximum swing diameter over cross slide	mm	320	Φ320	Φ350
Spindle nose type and code	-	A2-6	A2-8	A2-8
Spindle bore diameter	mm	65	Φ80	Φ80
Maximum bar stock passing diameter	mm	-	Φ50	-
Headstock				
Spindle speed range	r/min	50～3500	50～3500	50～4000
Maximum output torque of spindle	Nm	235	245	177
Spindle speed steps	-	Stepless	Infinitely variable speeds	Infinitely variable speeds
Main motor power	kW	15(30minutes)/11(rated)	15(30minutes)/11(rated)	15(30minutes)/11(rated)
Chuck diameter	inch	8"	8"	8"
X-axis rapid traverse speed	m/min	30	30	30
Z-axis rapid traverse speed	m/min	30	30	30
X-axis travel	mm	200	200	200
Z-axis travel	mm	416	550	1050
Machining Accuracy	-	IT6	IT6	IT6
Positioning Accuracy				
X-axis	mm	0.008	0.008	0.008
Z-axis	mm	0.008	0.008	0.008
C-axis	inch	63"	63"	63"
Repeat Positioning Accuracy				
X-axis	mm	0.004	0.004	0.004
Z-axis	mm	0.004	0.004	0.004
C-axis	inch	25"	25"	25"
Tailstock travel	mm	350	-	-
Tailstock sleeve travel	mm	100	100	100
Tailstock sleeve taper	morse	5#	5#	4#
Standard tool post type	-	Horizontal 12-position	Horizontal 12-position	Horizontal 12-position
Tool size				
Cylindrical turning tool	mm	25×25	25×25	25×25
Boring tool bar diameter	mm	Φ32/Φ25/Φ20/Φ16	Φ40/Φ32/Φ25/Φ20	Φ40/Φ32/Φ25/Φ20
Processing capacity				
Maximum drilling capacity	mm	12×0.2	12×0.2	12×0.2
Maximum milling capacity	mm	12×10×40	12×10×40	12×10×40
Maximum tapping capacity	mm	M10×1.5	M10×1.5	M10×1.5
Whether cutter head is able to select cutter handily	-	Yes	Yes	Yes
Maximum load capacity				
Disc workpieces	kg	200	200	200
Shaft workpieces	kg	500	500	500
Machine weight	kg	3650	4200	4650
Overall dimension (L×W×H)	mm	2410×2000×1960	2700×1900×2100	3570×1860×1850

Optional configuration

- GSK system, Siemens system
- FANUC Main moto
- Chip remover

MILL TURNING CENTER

HTC40Pm

SYMG 沈阳机床集团

Stander configuration

- FANUC system (main and tailstock)
- IEEPO horizontal 12-station power tool turret, including one 0° and 90° power tool,and one set of standard non-power tool holders
- Side-mounted chip conveyor
- A2-8 spindle
- Domestic lead screw, sliding guide rail
- Korean (or Taiwanese) 8" hydraulic chuck
- Hydraulic tailstock

Item		Unit	HTC40Pm /1000
Max. swing diameter over bed		mm	600
Max. cutting length		mm	990
Max. cutting diameter		mm	400
Standard cutting diameter		mm	300
Max. swing diameter over cross slide		mm	400
Spindle nose type and code		-	A2-8
Spindle bore diameter		mm	80
Headstock	Spindle speed range	r/min	50～3500
	Max. output torque of the spindle	Nm	302
	Spindle speed steps	-	stepless
	Main motor output power	kW	18.5（30 minutes）/15（rated）
Chuck	Chuck Diameter	mm	8²
X-axis rapid traverse speed		m/min	15
Z-axis rapid traverse speed		m/min	15
X-axis travel		mm	200
Z-axis travel		mm	1000
Machining Accuracy		-	IT6
Positioning Accuracy	X-axis	mm	0.01
	Z-axis	mm	0.015
	C-axis	-	40″
Repeatability	X-axis	mm	0.005
	Z-axis	mm	0.007
	C-axis	-	25″
Tailstock travel		mm	800
Tailstock sleeve travel		mm	100
Tailstock sleeve taper		morse	4#
Standard tool post type		-	Horizontal 12-station power tool post
Tool size	Cylindrical turning tool	mm	25×25
	Boring tool bar diameter	mm	Φ40/Φ32/Φ25/Φ20
Whether cutter head is able to select cutter handily		-	YES
Max. load capacity	Disc workpieces	kg	200 (Including chuck and other accessories)
	Shaft workpieces	kg	500 (Including chuck and other accessories)
Machine weight		kg	5500
Overall dimension (L x W x H)		mm	4100×2050×1960

Optional configuration

- α or β motor
- 10" chuck

MILL TURNING CENTER

HTC50Bm

SYMG 沈阳机床集团

Stander configuration

- FANUC Oi-TF system (α)
- Imported roller guide rail
- 12-station turret with tailstock at center height of 125
- 22/30kW (860N.m) main motor
- Hydraulic tailstock with hydraulic locking
- Integral spindle A2-11
- Imported lead screw
- Domestic chip conveyor

Item	Unit	HTC 50Bm-1000
Max. swing diameter over bed	mm	680
Max. cutting length	mm	900
Max. cutting diameter	mm	460
Max. swing diameter over cross slide	mm	Φ500
Spindle nose type and code	-	A2-11
Headstock	-	
Spindle bore diameter	mm	Φ104
Spindle speed range/Max. output torque of the spindle	r/min/Nm	35～3000/890 (αP50/6000isP)
Main motor power 30 minutes/continuous	kw	30/22
Chuck diameter/type	inch	12"
X-axis rapid traverse speed	m/min	30
Z-axis rapid traverse speed	m/min	30
X-axis travel	mm	240
Z-axis travel	mm	910
Machining Accuracy	-	IT6
Positioning Accuracy		
X-axis	mm	0.008mm
Z-axis	mm	0.012mm
C-axis	-	40"
Repeat Positioning Accuracy		
X-axis	mm	0.005mm
Z-axis	mm	0.006mm
C-axis	-	25"
Tailstock sleeve diameter	-	Φ120
Tailstock sleeve travel	mm	150
Tailstock travel	mm	800
Tailstock sleeve taper	morse	5#
Standard tool post type	-	Horizontal 12-position
Tool size		
Cylindrical turning tool	mm	25×25×150
Boring tool bar diameter	mm	Φ50/Φ40/Φ32/Φ25
Whether cutter head is able to select cutter handily	-	Yes
Max. speed of power tool	r/min	2000
Max. drilling capacity	mm x mm	20×0.2
Max. tapping capacity	mm x mm	M16×2
Max. milling capacity	mm x mm x mm/min	25×14×40
Max. load capacity		
Disc workpieces	kg	200
Shaft workpieces	kg	800
Machine weight	kg	7000
Overall dimension (L x W x H)	mm	3700 x 2210 x 2200

Optional configuration

- Turning center(m)with Alpha main servo
- Domestically made center frame and related accessories ranging from 35-235

MILL TURNING CENTER

T5.2-500/1000Qm

SMTCL

Stander configuration

- FANUC-0i-TF Plus(5) system
- Collet type spindle
- Hollow chuck cylinder
- 8-station homo-services tool holder

Items	Units	T5.2-500 Qm	T5.2-1000 Qm
Maximum turning diameter	mm	Φ360	Φ360
Maximum turning length	mm	500	1000
Maximum swing diameter over bed	mm	Φ560	Φ560
Maximum swing diameter over cross slide	mm	Φ350	Φ350
Spindle			
Spindle nose type and code	-	A2-6	A2-6
Inner diameter of front bearing	mm	100	100
Spindle front hole taper and taper hole	-	1:20;Φ70	1:20;Φ70
Spindle bore diameter	mm	Φ65	Φ65
Maximum bar stock passing diameter	mm	Φ50	Φ50
Chuck diameter	inch	8	8
Maximum spindle revolutions	r/min	4500	4500
Rated torque of spindle	Nm	136(769r/min)	136(769r/min)
Maximum torque of spindle	Nm	245(576r/min)	245(576r/min)
Main motor output power continuous/30 minutes	kw	11/15	11/15
Two-axis			
X/Z axis rapid traverse speed	m/min	30	30
X-axis travel	mm	200	200
Z-axis travel	mm	560	1050
Machining Accuracy	-	IT6	IT6
Positioning Accuracy			
X-axis	mm	0.008	0.008
Z-axis	mm	0.008	0.008
C-axis	inch	40	40
Repeat Positioning Accuracy			
X-axis	mm	0.004	0.004
Z-axis	mm	0.005	0.005
C-axis	inch	28	28
Tailstock			
Tailstock travel	mm	500	950
Tailstock drive mode	-	Servo drive	Servo drive
Tailstock taper	morse	MT-5	MT-5
Power Tool Turret			
Type	-	Horizontal 12-position	Horizontal 12-position
Center height	mm	80	80
Repeatability accuracy of turret rotation	Sec.	±1.6	±1.6
Max drilling capacity	mm × mm/u	14×0.15	14×0.15
Max milling capacity	mm	20×10×40	20×10×40
Whether cutter head is able to select cutter handily	-	Yes	Yes
End-face tool holder	mm	25*25 1pc	25*25 1pc
Outer circal tool holder	mm	25*25 3pcs	25*25 3pcs
Boring tool holder	mm	Φ32 3pcs	Φ32 3pcs
Reducer	mm	Φ25，Φ20 1pc	Φ25，Φ20 1pc
Power milling head	-	0° 90° 1pc	0° 90° 1pc
Coolant and chip removal			
Pressure of cooling pump	bar	3	3
Flow of cooling pump	-	66	66
Water tank capacity	-	200	200
type of chip conveyor	-	Chain-plate	Chain-plate
Other			
distance from spindle center to bed bottom	mm	1015	1015
Machine weight	kg	4200	4750
Total power capacity	kVA	27	27
Overall dimension (L×W×H)	mm	2750×1890×1900	3620×1890×1900

Optional configuration

- 12-station servo turret
- Power tool holders
- Rear chip conveyor
- Pneumatic doors
- Tool setter
- Workpiece measurement
- Oil mist collector
- Tool breakage detection

MILL TURNING CENTER

TLX-500

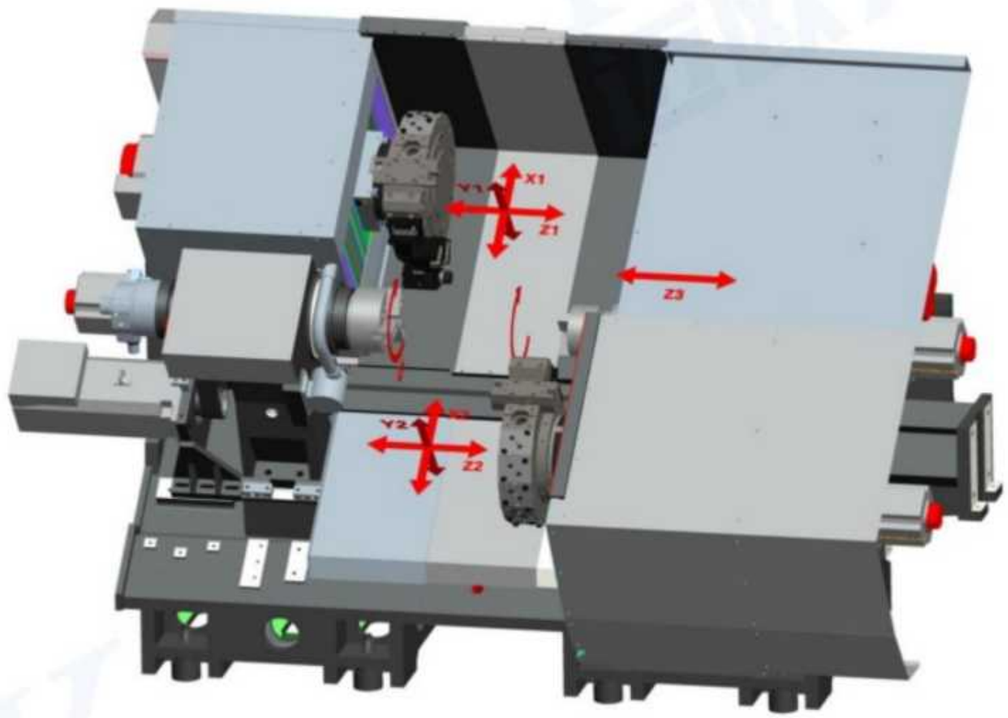

Item	Unit	TLX-500
Spindle max. swing diameter	Φ	550
Spindle max. machining diameter	mm	350
Max. turning length	mm	500
X-axis travel	mm	230
Y-axis travel	mm	±50
Z1-axis travel	mm	500
Z2-axis travel	mm	500
Positioning accuracy X/Z (Y)	mm	0.008
Repeatability X/Z (Y)	mm	0.002
Spindle specification	type	A2-6
Chuck through hole	Φ	65
Chuck size	In	8 inch
Max. speed	Rpm	4500
Spindle specification	type	A2-5
Spindle through hole	Φ	42
Number of turret tools	Pockets	12
Turret form	BMT	BMT-55

MILL TURNING CENTER

T5.2-500/1000 Sm

SMTCL

Stander configuration

- FANUC-0i-TF Plus(5) system
- Collet type spindle
- Hollow chuck cylinder
- 8-station homo-services tool holder

Items	Units	T5.2-500 Sm	T5.2-1000Sm
Maximum turning diameter	mm	Φ380	Φ380
Maximum turning length	mm	500	500
Maximum swing diameter over bed	mm	Φ560	Φ560
Maximum swing diameter over cross slide	mm	Φ400	Φ400
Spindle			
Spindle nose type and code	-	A2-8	A2-8
Inner diameter of front bearing	mm	120	120
Spindle front hole taper and taper hole	-	1:20;Φ90	1:20;Φ90
Spindle bore diameter	mm	Φ80	Φ80
Maximum bar stock passing diameter	mm	Φ65	Φ65
Chuck diameter	inch	10	10
Maximum spindle revolutions	r/min	4000	4000
Rated torque of spindle	Nm	180(769r/min)	180(769r/min)
Maximum torque of spindle	Nm	300(576r/min)	300(576r/min)
Main motor output power continuous/30 minutes	kw	15/18.5	15/18.5
Two-axis			
X/Z axis rapid traverse speed	m/min	20	20
X-axis travel	mm	200	200
Z-axis travel	mm	560	1025
Machining Accuracy	-	IT6	IT6
Positioning Accuracy			
X-axis	mm	0.008	0.008
Z-axis	mm	0.008	0.008
C-axis	inch	40	40
Repeat Positioning Accuracy			
X-axis	mm	0.004	0.004
Z-axis	mm	0.005	0.005
C-axis	inch	28	28
Tailstock			
Tailstock travel	mm	350/770	350/770
Tailstock drive mode	-	Bed saddle dragging	Bed saddle dragging
Tailstock taper	morse	MT-4	MT-4
Power Tool Turret			
Type	-	Horizontal 12-position	Horizontal 12-position
Center height	mm	80	80
Repeatability accuracy of turret rotation	Sec.	±1.6	±1.6
Max drilling capacity	mm × mm/u	14×0.15	14×0.15
Max milling capacity	mm	20×10×40	20×10×40
Whether cutter head is able to select cutter handily	-	Yes	Yes
End-face tool holder	mm	25*25 1pc	25*25 1pc
Outer circal tool holder	mm	25*25 3pcs	25*25 3pcs
Boring tool holder	mm	Φ32 3pcs	Φ32 3pcs
Reducer	mm	Φ25，Φ20 1pc	Φ25，Φ20 1pc
Power milling head	-	0° 90° 1pc	0° 90° 1pc
Coolant and chip removal			
Pressure of cooling pump	bar	3	3
Flow of cooling pump	-	66	66
Water tank capacity	-	200	200
type of chip conveyor	-	Chain-plate	Chain-plate
Other			
distance from spindle center to bed bottom	mm	1015	1015
Machine weight	kg	4300	5000
Total power capacity	kVA	42	42
Overall dimension (L×W×H)	mm	2870×1890×1900	3750×1890×1900

Optional configuration

- 12-station servo turret
- Power tool holders
- Rear chip conveyor
- Pneumatic doors
- Tool setter
- Workpiece measurement
- Oil mist collector
- Tool breakage detection

CNC VERTICAL LATHE

VTC12560S

SYMG 沈阳机床集团

VERTICAL LATHE

Item		Unit	VTC12560S
Main parameter	Workbench diameter	mm	1250
	Workbench Outer Jaw Range	mm	300-1060
	Workbench Inner Jaw Range	mm	350-1200
	Max. swing diameter	mm	1400
	Max. turning diameter	mm	1250
	Max. workpiece weight	Kg	5000
	Max. workpiece height	mm	600
	Max. torque of workbench	N. m	10000
	Max. speed of workbench	r/min	280
	Frequency conversion main motor power	kW	37
Ram	Ram body section size	mm	200×200
	X-axis travel	mm	-50～+1450
	Z-axis travel	mm	600
Feed rate	Cutting feed speed range	mm/min	1-1000
	X-axis rapid traverse speed	mm/min	12000
	Z-axis rapid traverse speed	mm/min	8000
Tool	Turning tool shank dimensions	mm	40X40(end face, outer circle)
	Max. cutting force of the tool	kN	18
Beam vertical travel		-	Fixed
Machine Weight		Kg	18000
Total electrical capacity		KVA	90
Roundness of machined workpiece		mm	0.01
Consistency of machined diameter		mm	0.02(on 300 measuring length)
Flatness of machined workpiece		mm	0.03/Φ1000
Surface roughness of machined workpiece		μm	Ra1.6
		μm	Arc surface, conical surface Ra3.2
Positioning Accuracy	X-axis	mm	0.025/1000(0.02/1000 optional closed loop)
	Z-axis	mm	0.025/1000(0.02/1000 optional closed loop)
Repeatability	X-axis	mm	0.008
	Z-axis	mm	0.008

Stander configuration

- Siemens 828D system
- Domestic flat bearings for load-bearing
- Imported linear guide for X-axis
- Chip removal device and external coolin
- Domestic variable frequency main motor
- Imported lead screw for threading
- Φ1250mm manual four-jaw chuck
- Semi-enclosed protection
- Imported spindle concentricity bearing
- Imported bearings for lead screw
- 6-position tool magazine (automatic tool change)

Optional configuration

- Maximum workpiece height of 1000mm
- AC main servo motor for using FANUC
- Standard outer circle tool holder/sleeve
- Siemens 828D CNC system, AC main servo motor
- Flat bearings (Japan NSK P5, Germany SKL P4)
- Standard inner hole tool holder/sleeve
- FANUC Oi-TF CNC system (motor speed control)
- Imported grating ruler for X and Z axes
- Workpiece measurement
- Tool detection

CNC VERTICAL LATHE

V4C/V6C/V6S

SYMG 沈阳机床集团

VERTICAL LATHE

Item	Unit	V4C	V6C	V6S
Processing capacity				
Max Swing Diameter	mm	Φ650	Φ860	Φ1000
Max Cutting Height	mm	500	700	800
Max Turning Diameter	mm	Φ500	Φ800	Φ900
Spindle				
Spindle Nose	-	A2-8	A2-11	A2-15
Speed	r/min	50-2500	50-1500	50-800
Power	kW	15/18.5	22/30	37/55
Max output torque	Nm	549βMotor 715α Motor	1245	2000
Chuck Diameter	inch	12"	21"	24"
Feeding				
X-axis Max Travel Speed	m/min	18	16	10
Z-axis Max Travel Speed	m/min	18	16	12
Travel				
X-axis Travel	mm	300	440	800
Z-axis Travel	mm	520	720	850
Turret				
Turret type	-	Horizontal 8-Station	Horizontal 8-Station	Vertical 6-Station
Size of tool	mm	25×25/Φ50	32×32/Φ50	32×32/Φ50
Accuracy				
Processing Accuracy	-	IT6~IT7	IT6-IT7	IT6-IT7
Surface Roughness of Finish Turning Outer Circle	μm	Ral.6	Ral.6	Ral.6
Positioning accuracy				
X-axis	-	0.008	0.008	0.018
Z-axis	mm	0.008	0.01	0.02
Repeat positioning accuracy				
X-axis	mm	0.005	0.006	0.0075
Z-axis	mm	0.005	0.006	0.015
Max Loading				
Disc	kg	350	600	800
Machine Weight				
Main machine	kg	6800	10500	15000
Machine size				
L×W×H	mm	2260×1780×2880	2700×2200×3300	3150×2650×3700

Stander configuration

- Servo system FANUC Oi-TF
- Domestic Two-axis screw
- Encoder
- Hydraulic and lubrication systems
- Hydraulic chuck
- Spindle bearings
- Domestic servo tool holder machining systems
- Rolling guide
- Screw bearings
- Chip removal device
- Safety systems

Optional configuration

- Servo system GSK 988TA
- Work inspection devices
- Imported Two-axis screw
- Automation
- Imported servo tool holder machining systems

CNC VERTICAL LATHE

VTC160100S

SYMG 沈阳机床集团

Stander configuration

- Siemens 828D system
- Load-bearing domestic flat bearing
- Imported linear guide for X-axis
- Chip conveyor and external cooling
- Domestic frequency conversion main motor
- Imported ball screw
- Φ1400mm manual four-jaw chuck
- Semi-enclosed protection
- Imported spindle centering bearing
- Imported screw shaft bearing
- 6-station tool magazine (automatic tool change)

VERTICAL LATHE

Item		Unit	VTC160100S
Main parameter	Workbench diameter	mm	1400
	Workbench Outer Jaw Range	mm	300-1260
	Workbench Inner Jaw Range	mm	350-1390
	Max. swing diameter	mm	1600
	Max. turning diameter	mm	1600
	Max. workpiece weight	Kg	6000
	Max. workpiece height	mm	1000
	Max. torque of workbench	N．m	13300
	Max. speed of workbench	r/min	280
	Frequency conversion main motor power	kW	37
Ram	Ram body section size	mm	200×200
	X-axis travel	mm	-50～+1520
	Z-axis travel	mm	1000
Feed rate	Cutting feed speed range	mm/min	1-1000
	X-axis rapid traverse speed	mm/min	12000
	Z-axis rapid traverse speed	mm/min	8000
Tool	Turning tool shank dimensions	mm	40X40(end face, outer circle)
	Max. cutting force of the tool	kN	20
Beam vertical travel			Fixed
Machine Weight		Kg	20000
Total electrical capacity		KVA	90
Roundness of machined workpiece		mm	0.01
Consistency of machined diameter		mm	0.02(on 300 measuring length)
Flatness of machined workpiece		mm	0.03/Φ1000
Surface roughness of machined workpiece		μm	Ra1.6
		μm	Arc surface, conical surface Ra3.2
Positioning Accuracy	X-axis	mm	0.025/1000(0.02/1000 optional closed loop)
	Z-axis	mm	0.025/1000(0.02/1000 optional closed loop)
Repeatability	X-axis	mm	0.008
	Z-axis	mm	0.008

Optional configuration

- Max workpiece height of 600mm
- With FANUC AC main and servo motor
- Siemens 828D CNC system, AC main and servo motor
- Flat bearing (Japan NSK P5, Germany SKL P4)
- FANUC Oi-TF CNC system (motor frequency conversion)
- Imported grating ruler for X/Z axis
- Standard outer round turning tool holder/sleeve
- Standard inner hole turning tool holder/sleeve

CNC VERTICAL LATHE

VTC250140

SYMG 沈阳机床集团

Stander configuration

- Siemens 828D system
- Load-bearing static pressure worktable
- Imported linear guide for X-axis
- Semi-enclosed protection
- Domestic frequency conversion main motor
- Imported ball screw
- Φ2000mm manual four-jaw chuck
- Imported spindle centering bearing
- Imported screw shaft bearing
- Single-cutter clamp sliding block
- Chip conveyor (no external cooling)

VERTICAL LATHE

Item		Unit	VTC250140
Main parameter	Workbench diameter	mm	ϕ2000
	Workbench Outer Jaw Range	mm	560-1760
	Workbench Inner Jaw Range	mm	710-1950
	Max. swing diameter	mm	ϕ2500
	Max. turning diameter	mm	ϕ2500
	Max. workpiece weight	Kg	16000
	Max. workpiece height	mm	2000
	Max. torque of workbench	N. m	35000
	Max. speed of workbench	r/min	150
	Frequency conversion main motor power	kW	55
Ram	Ram body section size	mm	240×240
	X-axis travel	mm	-50～+2150
	Z-axis travel	mm	1400
Feed rate	Cutting feed speed range	mm/min	1-1000
	X-axis rapid traverse speed	mm/min	8000
	Z-axis rapid traverse speed	mm/min	10000
Tool	Turning tool shank dimensions	mm	40X40
	Max. cutting force of the tool	kN	30
Beam	Lifting movement	mm	1400
	Lifting speed	mm/min	300
	Positioning spacing	mm	200
	Lifting gear	-	7 gears and 8 positions
	Positioning method	-	Hydraulic positioning pin
	Positioning instruction method	-	M function instruction
Machine Weight		Kg	40000
Total electrical capacity		KVA	125
Roundness of machined workpiece		mm	0.01
Consistency of machined diameter		mm	0.02(on 300 measuring length)
Flatness of machined workpiece		mm	0.03/Φ1000
Surface roughness of machined workpiece		μm μm	Ra1.6 Arc surface, conical surface Ra3.2
Positioning Accuracy	X-axis	mm	0.025/1000 (0.02/1000 optional closed loop)
	Z-axis	mm	0.025/1000 (0.02/1000 optional closed loop)
Repeatability	X-axis	mm	0.008
	Z-axis	mm	0.008

Optional configuration

- 6-station tool magazine (automatic tool change)
- Imported grating ruler for X/Z axis
- Worktable diameter: Φ2250mm
- 12-station tool magazine
- Chip conveyor and external cooling
- Standard inner hole turning tool holder/sleeve
- Siemens 828D CNC system, AC main and servo motor
- Standard outer round turning tool holder/sleeve

CONVENTIONAL PIPE THREADING LATHE

Q1313/Q1319C/Q1322C

沂机

Item		Unit	Q1313	Q1319C	Q1322C
Capacity	Swing over bed	mm	630/800	630/800	630/800
	Swing over cross slide	mm	340/520	340/520	340/520
	Distance between centers	mm	1500/3000	1500/3000	1500/3000
	Pipe threading range	mm	30-126	50-193	50-220
Spindle	Guideway width	mm	550	550	550
	Max. load capacity	T	3	3	3
	Spindle bore	mm	130	206	225
	Spindle speed range	rpm	30-800	20-600	20-600
	Chuck	mm	Φ400 3-jaw manual	Φ520 4-jaw manual	Φ520 4-jaw manual
Turret	Turret/tool post	-	Manual 4 position	Manual 4 position	Manual 4 position
	Tool shank size	mm	30×30	32×32	32×32
Feed	X axis travel	mm	320/420	320/420	320/420
	Z axis travel	mm	1350/2850	1350/2850	1350/2850
	X axis rapid traverse	mm/min	2300	2300	2300
	Z axis rapid traverse	mm/min	4000	4000	4000
Tailstock	Tailstock quill diameter	mm	Φ100	Φ100	Φ100
	Tailstock quill travel	mm	250	250	250
Motor	Main spindle motor	kW	11	11	11
Dimension	Width×Height	mm	1500×1500	1550×1550	1650×1550
	Length	mm	3700/5200	3700/5200	3700/5200
Weight	Net weight	T	4.0/5.2	4.3/5.5	4.5/5.7

Please note: machine bed length can customize according to real work demand.

CONVENTIONAL PIPE THREADING LATHE

Q1325C/Q1327C/Q1327

沂机

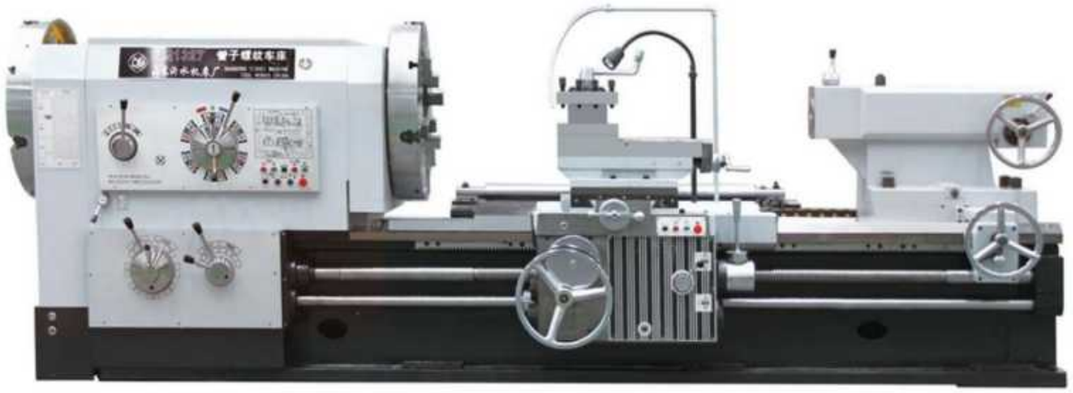

Item		Unit	Q1325C	Q1327C	Q1327
Capacity	Swing over bed	mm	800	800	1000
	Swing over cross slide	mm	480	480	610
	Distance between centers	mm	1500/3000	1500/3000	1500/3000
	Pipe threading range	mm	50-250	50-270	130-270
Spindle	Guideway width	mm	600	600	755
	Max. load capacity	T	4	4	6
	Spindle bore	mm	255	280	280
	Spindle speed range	rpm	20-420	20-420	16-380
	Chuck	mm	Φ630 4-jaw manual	Φ 680 4-jaw electric	Φ 800 4-jaw electric
Turret	Turret/tool post	-	Manual 4 position	Manual 4 position	Manual 4 position
	Tool shank size	mm	32×32	32×32	45×45
Feed	X axis travel	mm	420	420	520
	Z axis travel	mm	1250/2750	1250/2750	1350/2850
	X axis rapid traverse	mm/min	2300	2300	1870
	Z axis rapid traverse	mm/min	4000	4000	3740
Tailstock	Tailstock quill diameter	mm	Φ 120	Φ 120	Φ 160
	Tailstock quill travel	mm	250	250	300
Motor	Main spindle motor	kW	15	15	22
Dimension	Width×Height	mm	1700×1600	1700×1600	2100×1650
	Length	mm	4100/5600	4100/5600	4900/6400
Weight	Net weight	T	8.0/9.0	8.0/9.0	10.0/11.5

Please note: machine bed length can customize according to real work demand.

CONVENTIONAL PIPE THREADING LATHE

Q1332/Q1338/Q1343/Q1350

沂机

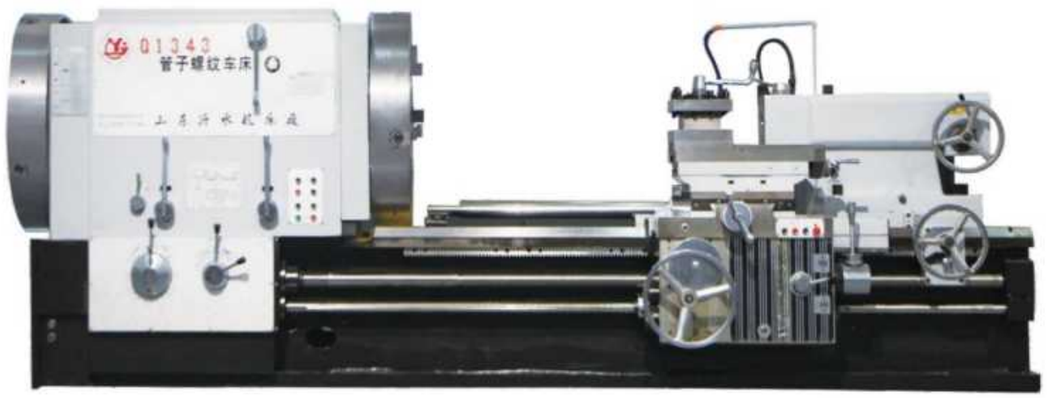

PIPE THREADING LATHE

Item		Unit	Q1332	Q1338	Q1343	Q1350
Capacity	Swing over bed	mm	1000	1000	1000	1200
	Swing over cross slide	mm	610	610	610	710
	Distance between centers	mm	1500/3000	1500/3000	1500/3000	1500/3000
	Pipe threading range	mm	190-320	190-380	270-430	330-510
Spindle	Guideway width	mm	755	755	755	765
	Max. load capacity	T	6	6	6	6
	Spindle bore	mm	330	390	440	520
	Spindle speed range	rpm	7.5-280	6-205	4.9-180	4.9-180
	Chuck	mm	Φ780 4-jaw electric	Φ850 4-jaw electric	Φ1000 4-jaw electric	
Turret	Turret/tool post	-	Manual 4 position			
	Tool shank size	mm	45×45	45×45	45×45	45×45
Feed	X axis travel	mm	520	520	520	520
	Z axis travel	mm	1350/2850	1350/2850	1350/2850	1350/2850
	X axis rapid traverse	mm/min	1870	1870	1870	1870
	Z axis rapid traverse	mm/min	3740	3740	3740	3740
Tailstock	Tailstock quill diameter	mm	Φ160	Φ160	Φ160	Φ160
	Tailstock quill travel	mm	300	300	300	300
Motor	Main spindle motor	kW	22	22	22	22
Dimension	Width×Height	mm	2100×1650	2100×1700	2100×1700	2100×1850
	Length	mm	4900/6400	4900/6400	5000/6500	5000/6500
Weight	Net weight	T	11.5/13.0	12.8/14.3	13.0/14.5	15.0/16.5

Please note: machine bed length can customize according to real work demand.

CNC PIPE THREADING LATHE

QK1313/QK1319/QK1322

沂机

PIPE THREADING LATHE

Item		Unit	QK1313	QK1319		QK1322	
			Manual	Manual	HYD	Manual	HYD
Capacity	Swing over bed	mm	630/800	630/800		630/800	
	Swing over cross slide	mm	340/520	340/520		340/520	
	Distance between centers	mm	1000-6000	1000-6000		1000-6000	
	Pipe threading range	mm	30-126	50-193		50-220	
	Guideway width	mm	550	550		550	
	Max. load capacity	T	3	3		3	
Spindle	Spindle bore taper	mm	130	206		206	
	Spindle nose type	-	VF.3 steps	VF.4 steps	HYD 4 steps	VF.4 steps	HYD 4 steps
	Spindle speed range	rpm	30-800	20-600		20-600	
	Chuck	mm	Φ400 3-jaw manual	Φ500 3-jaw manual		Φ500 3-jaw manual	
Turret	Turret/tool post	-	NC turret 4 position	NC turret 4 position		NC turret 4 position	
	Tool shank size	mm	32×32	32×32		32×32	
Feed	X axis travel	mm	320/420	320/420		320/420	
	Z axis travel	mm	1000-6000	1000-6000		1000-6000	
	X axis rapid traverse	mm/min	4000	4000		4000	
	Z axis rapid traverse	mm/min	6000	6000		6000	
Tailstock	Tailstock quill diameter	mm	Φ100	Φ100		Φ100	
	Tailstock quill travel	mm	250	250		250	
Motor	Main spindle motor	kW	11	11		11	
Dimension	Width×Height	mm	1800×1850	1880×1850		1880×1850	
	Length	mm	3300-8300	3300-8300		3300-8300	
Weight	Net weight	T	4-8	4.6-8.6		4.7-8.7	

Please note: machine bed length can customize according to real work demand, machine on this page can choose servo motor direct driving structure turning center with C axis.

Optional configuration

- Fanuc or other brand CNC controller
- Hydraulic tailstock
- Quick change tool post
- Pneumatic chuck
- Pneumatic position limiter
- Hydraulic turret or Power turret
- Tool setting armFull-shield

CNC PIPE THREADING LATHE

QK1325/QK1327C

沂机

PIPE THREADING LATHE

Item		Unit	QK1325		QK1327C	
			Manual	HYD	Manual	HYD
Capacity	Swing over bed	mm	800/1000		800/1000	
	Swing over cross slide	mm	480/680		480/680	
	Distance between centers	mm	1000-6000		1000-6000	
	Pipe threading range	mm	50-255		50-270	
	Guideway width	mm	600		600	
	Max. load capacity	T	4		4	
Spindle	Spindle bore taper	mm	255		280	
	Spindle nose type	-	VF.4 steps	HYD 4 steps	VF.4 steps	HYD 4 steps
	Spindle speed range	rpm	20-420		20-420	
	Chuck	mm	Φ630 4-jaw manual		Φ680 4-jaw manual	
Turret	Turret/tool post	-	NC turret 4 position		NC turret 4 position	
	Tool shank size	mm	32×32		32×32	
Feed	X axis travel	mm	420		420	
	Z axis travel	mm	1000-6000		1000-6000	
	X axis rapid traverse	mm/min	4000		4000	
	Z axis rapid traverse	mm/min	6000		6000	
Tailstock	Tailstock quill diameter	mm	Φ120		Φ100	
	Tailstock quill travel	mm	250		250	
Motor	Main spindle motor	kW	15		15	
Dimension	Width×Height	mm	1930×1900		1930×1900	
	Length	mm	3600-8600		3300-8600	
Weight	Net weight	T	6-9.5		6.2-9.7	

Please note: machine bed length can customize according to real work demand, machine on this page can choose servo motor direct driving structure turning center with C axis.

Optional configuration

- Fanuc or other brand CNC controller
- Full-shield
- Quick change tool post
- Hydraulic tailstock
- Hydraulic turret or Power turret

CNC PIPE THREADING LATHE

QK1327/QK1332/QK1338

沂机

PIPE THREADING LATHE

Item		Unit	QK1327	QK1332	QK1338
Capacity	Swing over bed	mm	1000	1000	1000
	Swing over cross slide	mm	610	610	610
	Distance between centers	mm	1500-6000	1500-6000	1500-6000
	Pipe threading range	mm	130-270	190-320	190-380
	Guideway width	mm	755	755	755
	Max. load capacity	T	6	6	6
Spindle	Spindle bore taper	mm	280	330	390
	Spindle nose type	-	VF.4 steps	VF.3 steps	VF.3 steps
	Spindle speed range	rpm	10-320	10-280	8-205
	Chuck	mm	Φ800 4-jaw manual	Φ780 4-jaw manual	Φ850 4-jaw manual
Turret	Turret/tool post	-	NC turret 4 position		
	Tool shank size	mm	40×40	40×40	40×40
Feed	X axis travel	mm	520	520	520
	Z axis travel	mm	500-6000	500-6000	500-6000
	X axis rapid traverse	mm/min	4000	4000	4000
	Z axis rapid traverse	mm/min	4000	4000	4000
Tailstock	Tailstock quill diameter	mm	Φ160	Φ160	Φ160
	Tailstock quill travel	mm	300	300	300
Motor	Main spindle motor	kW	22	22	22
Dimension	Width×Height	mm	2050×2050	2080×2080	2220×2120
	Length	mm	4950/9450	5000/9500	5000/9500
Weight	Net weight	T	10.5/15.6	11.5/15.9	12/16.4

Please note: machine bed length can customize according to real work demand, extra-long bed heavy duty lathe can customize simplified CNC pipe threading lathe without protective cover.

Optional configuration

- Fanuc or other brand CNC controller
- Hydraulic turret orPower turret
- Full-shield

CNC HEAVY DUTY PIPE THREADING LATHE

QK1343/QK1350/QK1363

沂机

Item		Unit	QK1343	QK1350	QK1363
Capacity	Swing over bed	mm	1000	1200	1500
	Swing over cross slide	mm	610	710	900
	Distance between centers	mm	1500/3000	1500/3000	1500/3000
	Pipe threading range	mm	270-430	330-510	330-630
	Guideway width	mm	755	765	1100
	Max. load capacity	T	6	6	10
Spindle	Spindle bore taper	mm	440	520	640
	Spindle nose type	-	VF.3 steps	VF.3 steps	VF.3 steps
	Spindle speed range	rpm	8-205	8-190	2-120
	Chuck	mm	Φ1000 4-jaw manual		Φ1250 4-jaw manual
Turret	Turret/tool post	-	NC turret 4 position		
	Tool shank size	mm	40×40	50×50	50×50
Feed	X axis travel	mm	520	520	750
	Z axis travel	mm	1250/2750	1250/2750	1250/2750
	X axis rapid traverse	mm/min	4000	4000	4000
	Z axis rapid traverse	mm/min	4000	4000	4000
Tailstock	Tailstock quill diameter	mm	Φ160	Φ160	Φ260(Rotary sleeves)
	Tailstock quill travel	mm	300	300	300
Motor	Main spindle motor	kW	22	22	37
Dimension	Width×Height	mm	2220×2120	2300×2200	2500×2500
	Length	mm	5000/6500	5000/6500	5000/7100
Weight	Net weight	T	13.0/14.0	15.0/16.0	18.0/19.3

Please note: machine bed length can customize according to real work demand, extra-long bed heavy duty lathe can customize simplified CNC pipe threading lathe without protective cover.

Optional configuration

- Fanuc or other brand CNC controller
- Hydraulic turret orPower turret
- Full-shield

VERTICAL MACHINING CENTER

VMC 850Q/VMC 1000Q/VMC 1100Q

SMTCL

Stander configuration

- FANUC Oi-MF Plus Type(5) system
- 3-axis pre-stretched ball screw
- Roller guideway
- Spindle BT40 10000r/min
- Chain conveyor
- Magazine BT40 24 tools

VERTICAL MACHINING CENTER

Item		Unit	VMC 850Q	VMC 1000Q	VMC 1100Q
Table					
Table size		mm	1000×500	1150×500	1300×610
Max.allowed loading		kg	600	600	1000
T slot size		mm×N	18×5	18×5	18×5
Machining range					
X axis travel		mm	850	1000	1100
Y axis travel		mm	500	500	620
Z axis travel		mm	540	540	600
Distence between	Max.	mm	660	660	720
spindle nose to table	Min.	mm	120	120	120
Distence between spindle center to guideway surface		mm	640	640	743
Spindle					
Taper (7:24)		-	BT40	BT40	BT40
Speed		r/min	10000	10000	10000
Torque		N.m	35.8/70 (S2 15Minutes)	35.8/70 (S2 15Minutes)	35.8/70 (S2 15 Minutes)
Main motor power		kW	7.5/11	7.5/11	7.5/11
Drive type		-	Synchrono us belt	Synchrono us belt	Synchrono us belt
Tooling					
Tool holder		-	MAS 403 BT40	MAS 403 BT40	MAS 403 BT40
Pull stud		-	MAS 403 40BT- 1	MAS 403 40BT- 1	MAS 403 40BT- 1
Feed					
Rapid feed	X axis	m/min	48	48	48
	Y axis	m/min	48	48	48
	Z axis	m/min	48	48	48
Motor power(XYZ)		kW	1.8/1.8/3	1.8/1.8/3	2003/3/3
Motor torque(XYZ)		Nm	2011/11/20	2011/11/20	20/20/20
Feeding speed		mm/min	1-20000	1-20000	1-20000
Toot Magazine					
Type		-	Robot	Robot	Robot
Tool collection		-	Nearest tool selection	Nearest tool selection	Nearest tool selection
Magazine capacity		-	24	24	24
Max.tool length		mm	300	300	300
Max.tool weight		kg	7	7	7
Max.tool disk dia.	Full	mm	Φ80	Φ80	Φ80
	Nearby	mm	Φ150	Φ150	Φ150
Tool change time		s	2.5	2.5	2.5
Distence between table to ground		mm	880	880	950
Machine weight		kg	5100	5400	6200
Electricity capacity		KVA	18	18	25
Overall Dimensions (L×W×H)		mm	2400×2560×2700 (without conveyor)	2700× 2560 × 2700 (without conveyor)	2940× 3450×3050 (without conveyor)

Optional configuration

- FANUC Oi-MF Plus Type(1) system,Siemens 828D system
- Spindle Inner coolant
- Tooling measuring
- Spindle speed BT40/BT50
- Gear box

VERTICAL MACHINING CENTER

VMC 850B/VMC 1100B/VMC 1300B

SMTCL

Stander configuration

- FANUC Oi-MF Plus Type(5) system
- 3-axis ball screw
- Linear guideway
- Magazine BT40 24 tools
- Chain conveyor
- Spindle BT40 10000r/min

Items		Unit	VMC 850B	VMC 1100B	VMC 1300B	
Table						
Table size		mm	1000×500	1360×610	1400×700	
Slot size		mm	18×5	18×5	18×5	
Max. Loading		kg	600	1000	1000	
Working range						
X axis travel		mm	850	1100	1300	
Y axis travel		mm	560	610	700	
Z axis travel		mm	650	650	700	
Max. distance between spindle nose to working table		mm	800	800	850	
Min.distance between spindle nose to working table		mm	150	150	150	
Spindle						
Tapper		-	BT40	BT40	BT40	BT50
Spindle speed		r/min	10000	10000	10000	6000
Main motor torque		N.m	52.5	52.5	52.5	71.6
Main motor power		kW	11/15	11/15	11/15	15/18.5
Feeding						
Feeding speed		mm/min	1-20000	1-20000	1-10000	
Rapid feeding x/y/z		m/min	45/45/30	45/45/30	24/24/20	
Magazine						
Magazine type		-	ATC	ATC	ATC	
Magazine capacity		piece	24	24	24	20
Max.tooling length		mm	300	300	300	300
Max.tooling weight		kg	7	7	7	15
Max.tooling diameter	Full	mm	Φ80	Φ80	Φ80	Φ133
	Near	mm	150	150	150	250
Tooling change time		s	2.5	2.5	2.5	3.5
Positioning						
X axis		mm	0.01	0.01	0.01	
Y axis		mm	0.008	0.008	0.008	
Z axis		mm	0.01	0.01	0.01	
Repeatability						
X axis		mm	0.008	0.008	0.008	
Y axis		mm	0.006	0.006	0.006	
Z axis		mm	0.008	0.008	0.008	
General electricity capacity		kVA	25	25	37	
Air pressure		Mpa	0.5-0.7	0.5-0.7	0.5-0.7	
Machine dimensions and weight						
Dimensions(L×W×H)		mm	3960× 2450× 2920	3960× 2450× 2920	5026 ×2970 ×3361	
Weight		kg	5900	6100	9500	

Optional configuration

- FANUC Oi-MF Plus Type(1) system,Siemens 828D system
- Spindle Inner coolant
- Spindle speed BT40/BT50
- Tooling measuring
- Gear box

HORIZONTAL MACHINING CENTER

HMC 63H/HMC 80H

SMTCL

Stander configuration

- FANUC 0i-MF PLUS CNC system
- 6000rpm mechanical spindle
- BT50-40T tool magazine
- 1° positioning double exchange table
- Spindle taper hole cleaning, spindle air curtain

HORIZONTAL MACHINING CENTER

Item			Unit	HMC 63H	HMC 80H
Worktable	Size		mm	630X630	800X800
	Loading ability		Kg	1200	2000
	Number of pallet		-	2	2
	Change time		S	14	18
Range of machining	Max. travel of worktable —X axis		mm	1000	1350
	Max travel of headstock ——Y axis		mm	900	1100
	Max travel of column——Z axis		mm	900	1100
	Rotary ——B axis		-	1°×360	1°×360
	Max swing diameter of machining workpiece		mm	Φ1000	Φ1250
	Max. height of machining workpiece		mm	1000	1200
	Distance between spindle end-face to center of table	Max.	mm	1000	1250
		Min	mm	100	150
	Distance between spindle center to worktable surface	Max	mm	1000	1150
		Min	mm	100	50
Spindle	Taper (7:24)		-	BT50	BT50
	Max. speed		rpm	6000	6000
	Main motor power (continuous/52)		Kw	18.5/22	22/26
	Max output torque (continuous/52)		N·m	605/739(30min)	718/849(30min)
Tool magazine	Capacity		pcs	40	40
	Max. length of tools		mm	500	500
	Max weight of tools		Kg	25	25
	Max. diameter of tools		mm	Φ125/Φ250	Φ125/Φ250
	Change time（T-T）		S	3.5	3.5
Feed	Range of cutting feed	X、Y、Z	mm/min	1-30000	1-24000
	Rapid feed	X、Y、Z	m/min	30	24
Positioning accuracy	X/Y/Z Axis		mm	0.01	0.012
	X/Y/Z Axis(With Grating)		mm	0.008	0.008
	B-axis (1°x360)		"	8	8
Repeat positioning accuracy	X/Y/Z Axis		mm	0.008	0.008
	X/Y/Z Axis(With Grating)		mm	0.005	0.006
	B-axis (1°x360)		"	3	3
CNC system			kg	FANUC 0i-MF	FANUC 0i-MF
Overall dimension(L×W×H)			mm	5200×4000×3500	6200×4500×385
Floor space			mm	7000×5250	7850×5800

Optional configuration

- FANUC 0i-MF PLUS CNC system
- 6000rpm mechanical spindle
- BT50-40T tool magazine
- 1° positioning double exchange table
- Spindle taper hole cleaning, spindle air curtain
- Water guns
- Tool Inspection
- Spray cooling
- Arbitrary indexing tables
- Automatic doors

5-AXIS MACHINING CENTER

SMU50

Stander configuration

- Siemens 840DSL
- XYZ Axis Ballscrew:40/40 /32 Germany Kammerer
- Pneumatic Components: Anwochi/Festo
- Spindle Speed 14000rpm Germany Kessler
- XYZB Axis Grating Scale:RCN Series Germany Heidenhan
- Hydraulic Components:Hedek,Germany
- XYZ Axis Guideway:Roller Guideway Mr35 Schneiberg, Swiss
- Tool Magazine:40T Ubuna Or Kiev

Item		Unit	SMU50
Basic Information	X/Y/Z axis travel	mm	500/450/450
	B-axis swing range	degree	-5/+110
	C-axis rotation range	degree	360
	Distance from spindle end face to workbench (when B-axis is at 0 degree)	mm	150～600
	Workbench size	mm	ϕ630X500
	Max. load capacity of the workbench	kg	250
Spindle	Max. spindle speed/taper shank	rpm	14000/HSK-A63
	Power (S1/S6-40%)	kW	15/21
	Output torque (S1/S6-40%)	Nm	80/112
Spindle (optional)	Max. spindle speed/taper shank	rpm	20000/HSK-A63
	Power (S1/S6-40%)	kW	25/40
	Output torque (S1/S6-40%)	Nm	87/135
Feed system	X/Y/Z axis rapid traverse speed	m/min	30
	Max. cutting feed rate	m/min	30
	B/C axis speed	rpm	20
positioning accuracy	X/Y/Z axis	mm	0.006
	B/C axis	arc sec	8
Repeatability	X/Y/Z axis	mm	0.004
	B/C axis	arc sec	5
Automatic tool change system	Number of tools	pcs	40
	Max. tool length	mm	300
	Max. tool diameter/adjacent no tools	mm	ϕ80/ϕ130
	Max. tool weight	kg	6
CNC system	Siemens	-	840D SL
Machine parameters	Total height	mm	2750
	L X W (including maintenance and operation space)	mm	4150X3980
	Net weight (excluding accessories)	kg	5350
	Electricity demand	kW	25

Optional configuration

- Spindle Speed 20000rpm Germany Kessler
- Oil Mist Separator S800 Filtermist England
- Coolant Gun
- Oil-Water Separation
- Tool Measuring OTS
- Tool Inner Coolant System 40bar
- Refined Surface Siemens
- Spindle Thermal Displacement Compensation
- Workpiece Testing OPM60
- Rotating Windo VP200 Germany Made
- OPC UA Siemens
- Machine Collision Monitoring

5-AXIS MACHINING CENTER

SMG80

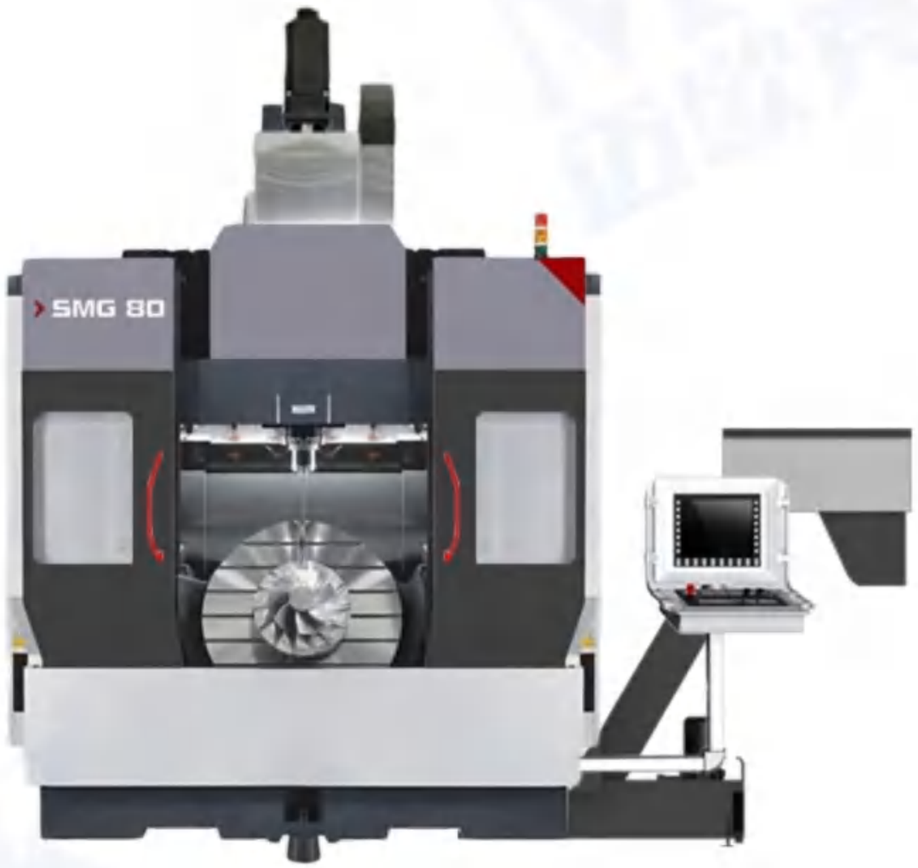

Stander configuration

- Siemens 840DSL
- XYZ Axis Ballscrew: 45/50 /45 Germany Kammerer
- Tool Magazine:40T
- Chip Conveyor
- Spindle Speed 20000rpm HSK-A63 Germany Kessler
- AC Rotory Table Germany Cytec
- Lubrication System
- Pneumatic System
- XYZ Axis Guideway:Roller Guideway 45/55/45 THK
- XYZB Axis Grating Scale: RCN Series Germany Heidenhan
- Hydraulic System

Item		Unit	SMG80	SMG80MT
Basic Information	X/Y/Z axis travel	mm	800/900/620	
	A-axis swing range	degree	±120	
	C-axis rotation range	degree	360	
	Distance from spindle end face to workbench	mm	120—740	
	Workbench size	mm	Φ800	
	Max. load capacity of the workbench	kg	1200	1000
	Max. turning diameter of the workbench	mm	Φ1000	
Spindle	Max. spindle speed/taper shank	rpm	20000/HSK-A63	20000/HSK-T63
	Power (S1/S6-40%)	kW	25/40	
	Output torque (S1/S6-40%)	Nm	87/135	
Feed system	X/Y/Z axis rapid traverse speed	m/min	50	
	Max. cutting feed rate	m/min	0.001～20	
	A-axis speed	rpm	30	
	C-axis speed	rpm	80	800
Positioning accuracy	X/Y/Z axis (German VDI 3441 standard)	mm	0.008	
	A/C axis (German VDI 3441 standard)	arc sec	8	
Repeatability	X/Y/Z axis (German VDI 3441 standard)	mm	0.005	
	B/C axis (German VDI 3441 standard)	arc sec	5	
Automatic tool change system	Number of tools	pcs	40（optional 40x2）	
	Max. tool length	mm	300	
	Max. tool diameter/adjacent space	mm	Φ75/ϕ 125	
	Max. tool weight	Kg	8	
CNC system	Heidenhain (optional Siemens)	-	Heidenhain TNC 640	Siemens
Machine parameters	Total height	mm	3730	
	L X W	mm	5300X4600	
	Net weight (excluding attachments)	Kg	23000	
	Electricity demand	Kw	90	95

Optional configuration

- Optional configuration
- Workpiece Testing OPM60
- Rotating Window Vp200 Germany Made
- Machine Collision Monitoring Heidenhan DCM
- Spindle Speed 15000rpm Germany Kessler
- Oil Mist Separator
- Coolant Gun
- Refined Surface Siemens
- Spindle Thermal Compensation Function Germany Kessler
- Tool Measuring NT Germany
- Tool Inner Coolant System 40bar
- Data Interface Heidenhan
- Tool Recognition System Baruf, Germany

5-AIXS MILL TURNING CENTER

CH6163-5

Stander configuration

- SIEMENS 840DSL
- Baxis:DUPLOMATIC ES-B20
- Spindle bearing:Germany FAG
- Electric spindle: MV8-325C Taiwan
- Italian Servo turret unit
- Hydraulic Chuck:Taiwan
- Grating scale:Heidenhan
- Automatic tool setting system:Italian

5-AXIS MILL TURNING CENTER

Item		Unit	CH6163-5
Max. swing diameter over bed		mm	Φ650
Max. swing diameter over saddle		mm	Φ540
Max. turning diameter		mm	Φ630
Max. turning length		mm	1000
X-axis travel		mm	680
Y-axis travel		mm	-140/+140
Z-axis travel		mm	1050
B-axis travel		°	-102.5 °/+102.5 °
C-axis travel		°	360°
Main spindle	Chuck diameter	-	15"
	Spindle speed range	r/min	30-2000
	Spindle nose	-	A2-8
	Spindle bore diameter	mm	ϕ90
	Main motor power	kW	28/42
	C-axis Min. indexing angle	°	0.001
	C-axis Max. speed	r/min	20
Milling axis	Power	kW	16.8
	Max. speed	rpm	7000
B-axis	Max. speed	r/min	26
	Indexing angle	°	5 ° or any angle
	Min. indexing angle	°	0.001
sub-spindle (electric spindle, special order)	Chuck diameter	-	12"
	Max. speed range	r/min	4000
	Spindle nose	-	A2-8
	Spindle bore diameter	mm	ϕ66
	Main motor power	kW	26
	C2-axis Min. indexing angle	°	0.001
	C2-axis Max. speed	r/min	200
	Sub-spindle movement mode	-	servo+ball screw
ATC	Tool shank type	-	CAPTO C6
	Max. tool diameter	mm	Φ100
	capacity	-	24
	Max. tool length	mm	200
	Max. tool weight	Kg	8
Power supply		-	380V 50HZ
Air supply		-	5-8bar 500L/min
Hydraulic station		MPa	6.3
Overall dimension (L x W x H)		mm	4700X3000X3200 (Without chip conveyor)
Machine weight		Kg	16500

5-AIXS MILL TURNING CENTER

CNCX850

SPARK 星火机床

5-AXIS MILL TURNING CENTER

Item	CNCX850
Max. swing diameter over bed	Φ850 mm
Max. machining diameter of tool holder	Φ850 mm
Max. length of processed workpiece	2000 mm
Max. weight of processed workpiece	1000 kg
Spindle nose standard	ISO A2-11
Spindle front bearing diameter	Φ170 mm
Spindle through-hole diameter	Φ100 mm
Spindle hydraulic chuck	15"
Max. spindle speed	2000 rpm
Max. output torque of the spindle	2000 Nm
Spindle servo motor power	39 kw
C-axis Max. speed	20 rpm
C-axis Max. torque	2000 Nm
Minimum programming increment for C-axis	0.0001°
Sub spindle end standard	ISO A1-8
Sub spindle through-hole diameter	Φ105 mm
Max. output torque of the sub spindle	800 Nm
Milling spindle power	S1 100% 22 kw S6 40% 30 kw
Max. speed of milling head	4000 rpm
Max. torque of milling head	S1 100% 200 Nm S6 40% 300 Nm
B-axis swing angle	320°(angle of milling cutter ± 160 °)
B-axis indexing positioning	2.5°
B-axis swing torque	1100 Nm
B-axis Max. clamping torque	3500 Nm
B-axis Min. programming increment	0.0001°
Z-axis travel (longitudinal)	2050 mm
X-axis travel (vertical)	+600 /-50 mm
Y-axis travel (transverse)	400（±200） mm
W-axis travel (sub spindle box)	1500 mm
Z-axis rapid traverse speed	12 m/min
X-axis rapid traverse speed	12 m/min
Y-axis rapid traverse speed	12 m/min
W-axis rapid traverse speed	12 m/min
Tool system	HSK 63A
Number of tool magazine	36 pcs
Max. tool diameter (when adjacent positions are full)	Φ100mm
Max. tool weight	7 Kg
Machine tool dimensions	13.1 x 3.3 x3.1 m
Machine center height	1250 mm
Total weight of machine tool	20000 kg
Control system	HUAZHONG HNC-840DI

CNC BORING MACHINE

PBC110(F)M

SYMG 沈阳机床集团

BORING MACHINE

Item		Unit	PBC110(f)m
Table Size		mm	1000×1250
			1250×1400
Max. Loading of Table		T	5
Diameter of Spindle		mm	Φ110
Diameter of Faceplate		mm	- Φ630
Spindle Taper Bore		-	ISO 7:24 NO.50
Turret		-	JT50/BT50
Spindle Speed		r/min	10-2500 10-2000(fm)
Faceplate Speed		r/min	-210
Main Motor Power		kW	17/20.4
Max. Torque of Spindle		Nm	1300/1600
table Travel--X		mm	2000
Headstock Travel--Y		mm	1500
Column travel Z		mm	1200
Spindle travel--W		mm	550
Faceplate slider travel U		mm	-140
Swing over Table B		o	0.001×360
Distance from spindle center to table surface		mm	60-1560/30-1530
Distance from spindle end face to table center		mm	350 487(fm)
Feeding speed	X、Y、Z	mm/min	1-6000
	W	mm/min	1-2000
	U	mm/min	-/1-1000
	B	r/min	0-1

Stander configuration

- FANUC 0i system
- XYZ axis imported linear guide rails (PBC series)
- Centralized lubrication for the machine
- External cooling and coolant tank chip remover
- Column armor protection
- Spindle air blowing function
- Imported spindle bearings
- Worktable water tray
- Spindle box oil cooler

Optional configuration

- SIEMENS 828D system
- X, Y and Z axis scales
- Accessory milling heads
- 24/40/60chain magazine (110 series)
- Spindle internal cooling system
- Water guns
- Table area protection
- Pump station oil cooler
- Air guns

CNC BORING MACHINE

TKP6513

SYMG 沈阳机床集团

Stander configuration

- FANUC 0i system
- Imported ball screws
- Bed steel pull plate protection
- Centralized lubrication for the machine
- External cooling and Coolant tank chip remover
- Column armor protection
- Spindle air blowing function
- Imported spindle bearings
- Worktable water tray
- Spindle box oil cooler
- B-axis circular grating

Item		Unit	TKP6513
Table Size		mm	1400×1600/2000×2000
Max. Loading of Table		T	10
Diameter of Spindle		mm	Φ130
Diameter of Faceplate		mm	Φ730
Spindle Taper Bore		-	ISO 7:24 NO.50
Turret		-	JT50/BT50
Spindle Speed		r/min	10-2000
Faceplate Speed		r/min	10-125
Main Motor Power		kW	25/30
Max. Torque of Spindle		Nm	2500/3000
table Travel--X		mm	2000/3000/3500/4000
Headstock Travel--Y		mm	1600/2000/2500/3000
Column travel Z		mm	1600/2000
Spindle travel--W		mm	800
Faceplate slider travel U		mm	200
Swing over Table B		o	0.001×360
Distance from spindle center to table surface		mm	100-1700
Distance from spindle end face to table center		mm	850/1050
Feeding speed	X、Y、Z	mm/min	1-6000
	W	mm/min	1-3000
	U	mm/min	1-3000
	B	r/min	0-1

Optional configuration

- 40/60 Tool Changer
- Spindle Internal Cooling System
- Water Gun
- Worktable Area Protection
- Pump Station Oil Cooler
- Air Gun
- X, Y, Z-axis Linear Scale
- Accessory Milling Head

CNC BORING MACHINE

TPX6111B/TPX6113

SYMG 沈阳机床集团

BORING MACHINE

Item		Unit	TPX6111B	TPX6113
Spindle	Diameter	mm	110	130
	Taper	-	Morse No6 (ISO7:24No50)	Metric 80 (ISO7:24No50)
	Max Torque	N.m	1225	3136
	Max Axial Thrust	N	12250	31360
	Speed Settings	-	22	24
	Speed Range	r/min	8-1000	4-800
	Main Motor Power	kW	7.5	15
Facing Plate	Max Torque	N.m	1960	4900
	Diameter	mm	600	750
	Speed Range	r/min	4-200	2.5-125
	Speed Settings	-	18	18
Worktable	Dimensions	mm	1100×960	1600×1400
	Max Load	kg	5000	8000
	T-slot Size	mm	22	28
	T-slot Count	-	7	9
Machining Range	X-axis Max Travel	mm	900	1600
	Y-axis Max Travel	mm	900	1400
	Z-axis Max Travel	mm	1400	2000
	W-axis Max Travel (Spindle)	mm	600	900
	U-axis Max Travel (Facing Plate Slide)	mm	180	250
	B-axis Rotary Angle	o	360	360
	Min Distance Between Spindle Centerline and Worktable	mm	0	0
Feed	Rapid Traverse	mm/min	X/Y/Z/W:2500	X/Y/Z/W:2500
	Feed range of axes for each spindle revolution	mm/rev	0.04-6/0.01-1.88 (X/Y/Z/W)	0.05-8/0.01-2 (X/Y/Z/W)
General Specs	Dimensions (L×W×H)	mm	4910×2454×2750	6995×3647×3442
	Machine Weight	kg	11500	24000

Optional configuration

- Table size
- X,Y,Z Linear Scale